Pressure Booster System

Hyamat V

Type Series Booklet

Legal information/Copyright

Type Series Booklet Hyamat V

All rights reserved. The contents provided herein must neither be distributed, copied, reproduced, edited or processed for any other purpose, nor otherwise transmitted, published or made available to a third party without the manufacturer's express written consent.

Subject to technical modification without prior notice.

© KSB Aktiengesellschaft, Frankenthal 18.05.2016

Contents

Building Services: Water Supply 4
Pressure Booster Systems 4
Hyamat V 4
Main applications 4
Fluids handled 4
Operating data 4
Designation 4
Design details 4
Configuration and function 5
Materials 6
Product benefits 6
Selection information 7
Technical data 8
Type of connection 10
Selection chart 11
Characteristic curves 12
Dimensions and weights 21
Scope of supply 25
Accessories 26

Building Services: Water Supply

Pressure Booster Systems

Hyamat V

Main applications

- Pressure boosting

Fluids handled

Pump for handling clean liquids not chemically and mechanically aggressive to the pump materials.

- Drinking water
- Service water
- Cooling water

Operating data

Operating properties

Characteristic		Value
Flow rate	Q [m³/h]	≤ 660 with a max. of 6 pumps[1)]
	Q [l/s]	≤ 183 with a max. of 6 pumps[1)]
Head	H [m]	≤ 160
Fluid temperature	T [°C]	≤ 70
		≤ 25 to DIN 1988 (DVGW)
Operating pressure	p_d [bar]	≤ 16
Inlet pressure	p_{vor} [bar]	≤ 10

Designation

Example: Hyamat V 4 / 1508B / 1,2 - 3,2

Designation key

Code	Description
Hyamat	Pressure booster system
V	One variable-speed pump
4	Number of pumps
15	Pump size
08	Number of pump stages
B	Design status
1,2	Minimum inlet pressure [bar]
3,2	Maximum usable inlet pressure [bar]

Design details

Design

- Fully automatic pressure booster package system
- Baseplate-mounted
- Two to six vertical high-pressure centrifugal pumps, one of them with continuously variable speed adjustment
- Hydraulic components made of stainless steel / brass
- One check valve and shut-off valves to DIN/DVGW for each pump
- Anti-vibration mounts for each pump for systems with Movitec 2B, 4B, 6B, 10B, 15B
- Systems with level-adjustable feet with rubber pads (supplied but not fitted) for systems with Movitec 25B, 40B, 60B and 90B
- Membrane-type accumulator (direct-flow) to DIN 4807-5 on the discharge side, approved for drinking water
- Pressure gauge for pressure indication
- Pressure transmitter on the discharge side
- Design and function as per DIN EN 806-2, DIN 1988-500

Installation type

- Stationary installation

Drive

- Electric motor 50 Hz, 2-pole, IE3, special KSB model, for three-phase mains

Automation

- Control cabinet IP54
- Fully electronic control to ensure the required supply pressure
- LEDs indicating operational availability and fault of the system
- Service interface for connection to a PC
- Transformer for control voltage
- Motor protection switch per pump
- Lockable master switch (repair switch)
- Manual emergency switch, installed in cabinet
- Pressure transmitter on the discharge side
- Wiring plan to VDE and parts list for electric parts
- Terminal strip/terminals with identification for all connections
- Terminal connection for digital dry running protection

1) With stand-by pump as peak load pump

Configuration and function

Hyamat V

1	Control unit	2	Control cabinet
3	Pump	4	Manifold
5	Baseplate		

Design

The fully automatic pressure booster system is equipped with two to six vertical high-pressure pumps (3) (one of which is speed-controlled) for pumping the fluid handled to the consumer installations in the set pressure range.

Function
Automatic mode

Two to six pumps (3) are controlled and monitored by a micro-processor control unit (1). One pump is connected to a frequency inverter and controlled by the control unit so as to ensure a constant discharge pressure of the pressure booster system.
As the demand increases or decreases, peak load pumps are started and stopped automatically.
As soon as the demand increases again after one pump has been stopped, another pump which has not been in operation before is started up.
When the last (FI-controlled) pump has been stopped and the demand increases again, the next pump in line is started up and operated on the frequency inverter.
The stand-by pump is also included in the alternating cycle.
The standard setting is for the pressure booster system to start automatically as a function of pressure; the actual pressure is measured by an analog pressure measuring device (pressure transmitter). The function of this pressure transmitter is monitored (live-zero).
As long as the pressure booster system is in operation, the pumps are started and stopped as a function of demand (standard setting). In this way it is ensured that the individual pumps operate only in line with the actual demand.
The variable-speed pump reduces wear as well as the pumps' frequency of starts in parallel operation. If a duty pump fails, the next pump is started up immediately and a fault is output, which can be reported via volt-free contacts (e.g. to the control station).
If the demand drops towards 0, the pressure booster system slowly runs down to the stop point.
The operating status is displayed via LEDs.

Function
Response to FI fault

The pressure booster system's response to a potential frequency inverter failure can be set at the control unit.
As a standard, the control unit will switch to cascade operation if the frequency inverter fails. All the parameters required for this mode of operation can be set at the control unit.
If automatic switchover to cascade operation is not wanted, parameters can be set for the pressure booster system to stop.

Function
Energy-saving mode

In conjunction with a very large discharge-side accumulator, the energy-saving mode prevents the pressure booster system from running at the least efficient operating point, supplying very small amounts of water.
If very small amounts of water are consumed the pressure booster system only fills the downstream accumulator and stops.
Any small water volumes required can then be supplied from the accumulator.

Function of dynamic pressure compensation

A dynamic flow rate-dependent set value re-adjustment, also called dynamic pressure compensation function, can be activated, if required.
In this mode, the system responds to decreasing flow rates by automatically increasing the set value to compensate the pressure losses in the piping.

Function
Manual mode

Depending on the equipment the pressure booster system is supplied with, the pumps can be operated in manual mode in either one or two different ways.
Standard: By making the appropriate settings at the display, one of the pumps can be operated directly via the mains for 10 seconds, independently of the control unit. The pump will then automatically return to OFF mode.
Supplementary equipment: Manual-0-automatic selector switches can be supplied as supplementary equipment. They can be used to operate each pump directly on mains power, independently of the control unit.

In manual mode, a minimum flow (see table below) is essential to prevent the fluid handled and the pump from overheating when no water is consumed at the consumer installations.

Minimum flow for pump in manual mode

Minimum flow per pump in manual mode

Pump	Minimum flow per pump in manual mode [l/h]
Movitec 2B	200
Movitec 4B	400
Movitec 6B	600
Movitec 10B	1100
Movitec 15B	1600
Movitec 25B	2800
Movitec 40B	4600
Movitec 60B	6100
Movitec 90B	8500

Example

An open $^{1}/_{2}$-inch tap equals a water consumption of approx. 800 to 1,200 l/h.

Dry running protection (supplementary equipment)

To protect the system from dry running, a range of protective equipment (see Supplementary equipment / Accessories) is available for various installation conditions.
Digital or analog lack-of-water monitoring equipment can be connected to the corresponding terminals.

Field bus connection (supplementary equipment)

For remote monitoring of all system-relevant parameters and connection to a control station the system can optionally be supplied fitted with a field bus module.

Materials

Overview of available materials

Component	Material
Pump casing	Stainless steel
Shroud	Stainless steel
Hydraulic system	Stainless steel
Mechanical seal	Complies with EN 12756
Primary ring	Silicon carbide
Mating ring	Hard carbon
Elastomer	EPDM
Baseplate	Steel, with powder or paint coating
Hydraulic design	
Manifold	Stainless steel
Valves	Copper-base alloy / brass or nodular cast iron / EPDM DVGW-approved Approved for drinking water
Accumulator	Connection made of stainless steel, flow through valve to DIN 4807-5
Membrane	Approved for drinking water

Product benefits

- Ready-to-connect, supplied pre-set and tested for functionality
- User-friendly, straightforward menu navigation
- Reliable operation by corrosion-resistant internal parts
- Suitable for drinking water installations, manufactured under stringent hygienic conditions
- Energy-efficiency optimised by energy-saving function
- Hydraulic components made of stainless steel

Selection information

Selecting the pressure booster system

Requirements:
Flow rate 10 m³/h
Start-up pressure 5.5 bar
Stand-by pump to DIN 1988
Solution:
Hyamat V 5/0211 B

1. According to the table *Flow rate as a function of the number of pumps* the system may comprise either 4 or 5 duty pumps (a stand-by pump has been requested).
2. According to the table *Flow rate as a function of the number of pumps* the flow rate requirement can be either 10 m³/h (4 duty pumps) or 12.5 m³/h (5 duty pumps).
3. The characteristic curves suggest Hyamat V 5/0211 B (operating point close to Q_{opt})

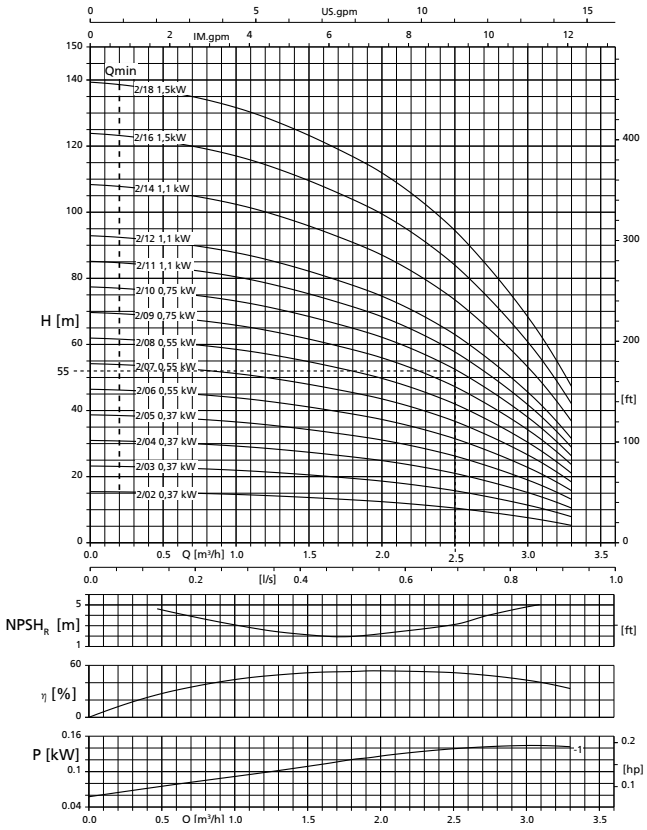

The flow rate in the characteristic curve is based on one duty pump:
The flow rate of a stand-by pump, if any, is not taken into account when calculating the flow rate required.

Flow rate as a function of the number of pumps

Number of duty pumps	With stand-by pump	Flow rate indicated in the diagram
1	No	Flow rate [Q] as shown in characteristic curve
1	Yes	Flow rate [Q] as shown in characteristic curve
2	No	Flow rate required divided by 2 = flow rate in characteristic curve [Q]
2	Yes	Flow rate required divided by 2 = flow rate in characteristic curve [Q]
3	No	Flow rate required divided by 3 = flow rate in characteristic curve [Q]
3	Yes	Flow rate required divided by 3 = flow rate in characteristic curve [Q]
4	No	Flow rate required divided by 4 = flow rate in characteristic curve [Q]
4	Yes	Flow rate required divided by 4 = flow rate in characteristic curve [Q]
5	No	Flow rate required divided by 5 = flow rate in characteristic curve [Q]
5	Yes	Flow rate required divided by 5 = flow rate in characteristic curve [Q]
6	No	Flow rate required divided by 6 = flow rate in characteristic curve [Q]

Determining the power input

- The power input is indicated per stage (St = 1) and/or per stage with a smaller impeller (St = -1).
  The pump input power can be calculated accordingly.
  Calculation: value indicated in the diagram (St = 1) × number of stages + value indicated in the diagram (St = -1) × number of stages with a smaller impeller
  Example 1, Movitec 90/4: P = (St = 1) × 4
  Example 2, Movitec 90/4-1: P = (St = 1) × 3 + (St = -1)
  Example 3, Movitec 90/4-2: P = (St = 1) × 2 + (St = -1) × 2

Technical data

Electrical performance data

Electrical performance data

Hyamat V with Movitec pumps	Rated power per motor	Rated current per motor at 400 V	Total rated power [kVA]				
			Number of pumps (motors)				
	[kW]	[A]	2	3	4	5	6
0202B	0,37	0,94	1,3	2	2,6	3,3	3,9
0203B	0,37	0,94	1,3	2	2,6	3,3	3,9
0204B	0,37	0,94	1,3	2	2,6	3,3	3,9
0205B	0,37	0,94	1,3	2	2,6	3,3	3,9
0206B	0,55	1,33	1,9	2,8	3,7	4,7	5,6
0207B	0,55	1,33	1,9	2,8	3,7	4,7	5,6
0208B	0,55	1,33	1,9	2,8	3,7	4,7	5,6
0209B	0,75	1,68	2,4	3,6	4,7	5,9	7
0210B	0,75	1,68	2,4	3,6	4,7	5,9	7
0211B	1,1	2,4	3,4	5,1	6,7	8,4	10,1
0212B	1,1	2,4	3,4	5,1	6,7	8,4	10,1
0214B	1,1	2,4	3,4	5,1	6,7	8,4	10,1
0216B	1,5	2,92	4,1	6,2	8,2	10,2	12,2
0218B	1,5	2,92	4,1	6,2	8,2	10,2	12,2
0402B	0,37	0,94	1,3	2	2,6	3,3	3,9
0403B	0,55	1,33	1,9	2,8	3,7	4,7	5,6
0404B	0,55	1,33	1,9	2,8	3,7	4,7	5,6
0405B	0,75	1,68	2,4	3,6	4,7	5,9	7
0406B	1,1	2,4	3,4	5,1	6,7	8,4	10,1
0407B	1,1	2,4	3,4	5,1	6,7	8,4	10,1
0408B	1,5	2,92	4,1	6,2	8,2	10,2	12,2
0409B	1,5	2,92	4,1	6,2	8,2	10,2	12,2
0410B	1,5	2,92	4,1	6,2	8,2	10,2	12,2
0411B	2,2	4,15	5,9	8,8	11,6	14,5	17,4
0412B	2,2	4,15	5,9	8,8	11,6	14,5	17,4
0414B	2,2	4,15	5,9	8,8	11,6	14,5	17,4
0416B	3	5,59	7,9	11,8	15,7	19,6	23,4
0602B	0,37	0,94	1,3	2	2,6	3,3	3,9
0603B	0,75	1,68	2,4	3,6	4,7	5,9	7
0604B	1,1	2,4	3,4	5,1	6,7	8,4	10,1
0605B	1,1	2,4	3,4	5,1	6,7	8,4	10,1
0606B	1,5	2,92	4,1	6,2	8,2	10,2	12,2
0607B	1,5	2,92	4,1	6,2	8,2	10,2	12,2
0608B	2,2	4,15	5,9	8,8	11,6	14,5	17,4
0609B	2,2	4,15	5,9	8,8	11,6	14,5	17,4
0610B	2,2	4,15	5,9	8,8	11,6	14,5	17,4
0611B	3	5,59	7,9	11,8	15,7	19,6	23,4
0612B	3	5,59	7,9	11,8	15,7	19,6	23,4
0614B	3	5,59	7,9	11,8	15,7	19,6	23,4
1002B	0,75	1,68	2,4	3,6	4,7	5,9	7
1003B	1,1	2,4	3,4	5,1	6,7	8,4	10,1
1004B	1,5	2,92	4,1	6,2	8,2	10,2	12,2

Hyamat V with Movitec pumps	Rated power per motor	Rated current per motor at 400 V	Total rated power [kVA]				
			Number of pumps (motors)				
	[kW]	[A]	2	3	4	5	6
1005B	2,2	4,15	5,9	8,8	11,6	14,5	17,4
1006B	2,2	4,15	5,9	8,8	11,6	14,5	17,4
1007B	3	5,59	7,9	11,8	15,7	19,6	23,4
1008B	3	5,59	7,9	11,8	15,7	19,6	23,4
1009B	4	7,45	10,6	15,7	20,9	26,1	31,2
1010B	4	7,45	10,6	15,7	20,9	26,1	31,2
1011B	4	7,45	10,6	15,7	20,9	26,1	31,2
1013B	5,5	10	14,2	21,1	28,1	35	41,9
1502B	2,2	4,15	5,9	8,8	11,6	14,5	17,4
1503B	3	5,59	7,9	11,8	15,7	19,6	23,4
1504B	4	7,45	10,6	15,7	20,9	26,1	31,2
1505B	5,5	10	14,2	21,1	28,1	35	41,9
1506B	5,5	10	14,2	21,1	28,1	35	41,9
1507B	7,5	13,4	19	28,3	37,6	46,9	56,2
1508B	7,5	13,4	19	28,3	37,6	46,9	56,2
2502B	4	7,45	10,6	15,7	20,9	26,1	31,2
2503B	5,5	10	14,2	21,1	28,1	35	41,9
2504B	7,5	13,4	19	28,3	37,6	46,9	56,2
2505B	11	19,3	27,4	40,8	54,2	67,5	80,9
2506B	11	19,3	27,4	40,8	54,2	67,5	80,9
2507B	15	26,2	37,2	55,4	73,5	91,7	109,8
4002-2B	5,5	10	14,2	21,1	28,1	35	41,9
4002B	7,5	13,4	19	28,3	37,6	46,9	56,2
4003-2B	11	19,3	27,4	40,8	54,2	67,5	80,9
4003B	11	19,3	27,4	40,8	54,2	67,5	80,9
4004-2B	15	26,2	37,2	55,4	73,5	91,7	109,8
4004B	15	26,2	37,2	55,4	73,5	91,7	109,8
4005-2B	18,5	31,8	45,2	67,2	89,2	111,3	133,3
4005B	18,5	31,8	45,2	67,2	89,2	111,3	133,3
4006-2B	18,5	31,8	45,2	67,2	89,2	111,3	133,3
4006B	22	37,6	53,4	79,5	105,5	131,6	157,6
6001B	5,5	10	14,2	21,1	28,1	35	41,9
6002-2B	7,5	13,4	19	28,3	37,6	46,9	56,2
6002B	11	19,3	27,4	40,8	54,2	67,5	80,9
6003-2B	15	26,2	37,2	55,4	73,5	91,7	109,8
6003B	18,5	31,8	45,2	67,2	89,2	111,3	133,3
6004-2B	18,5	31,8	45,2	67,2	89,2	111,3	133,3
6004B	22	37,6	53,4	79,5	105,5	131,6	157,6
6005-2B	22	37,6	53,4	79,5	105,5	131,6	157,6
9002-2B	11	19,3	27,4	40,8	54,2	67,5	80,9
9002-1B	15	26,2	37,2	55,4	73,5	91,7	109,8
9002B	15	26,2	37,2	55,4	73,5	91,7	109,8
9003-2B	18,5	31,8	45,2	67,2	89,2	111,3	133,3
9003-1B	22	37,6	53,4	79,5	105,5	131,6	157,6
9003B	22	37,6	53,4	79,5	105,5	131,6	157,6

Type of connection

Types of connection (schematic)

Direct	Indirect	
	Unpressurised inlet tank at the same or at a higher level than the system	Unpressurised inlet tank at a lower level than the system (suction lift operation) [2]
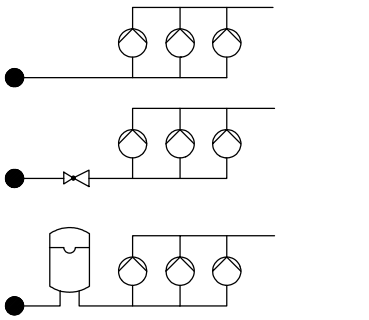 1952.106	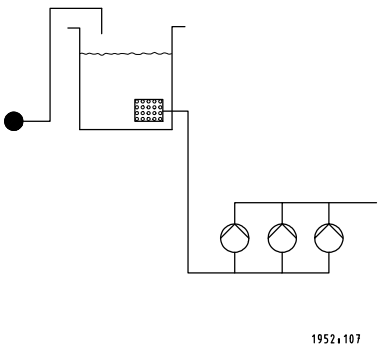 1952.107	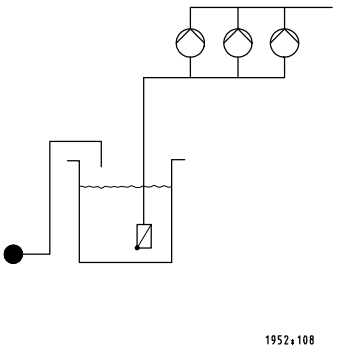 1952.108
Inlet pressure monitoring (see Supplementary equipment or Accessories)		
At p_{in} >0.5 bar (min. 1 bar, DIN 1988) - Pressure switch - Pressure sensor At p_{in} <0.5 bar - Pressure sensor - Flow monitoring[3]	- Float switch - Set of electrodes and relay - Dry running protection for PE inlet tank - Pressure sensor - Flow monitoring[3]	- Float switch - Set of electrodes and relay - Dry running protection for PE inlet tank - Flow monitoring[3]

2) Non-priming pumps, suitable for suction lift operation (for selection, please consult KSB)
3) Note: Automatic reset is not possible for this type of dry running protection.

Selection chart

Hyamat V; n = 2900 rpm

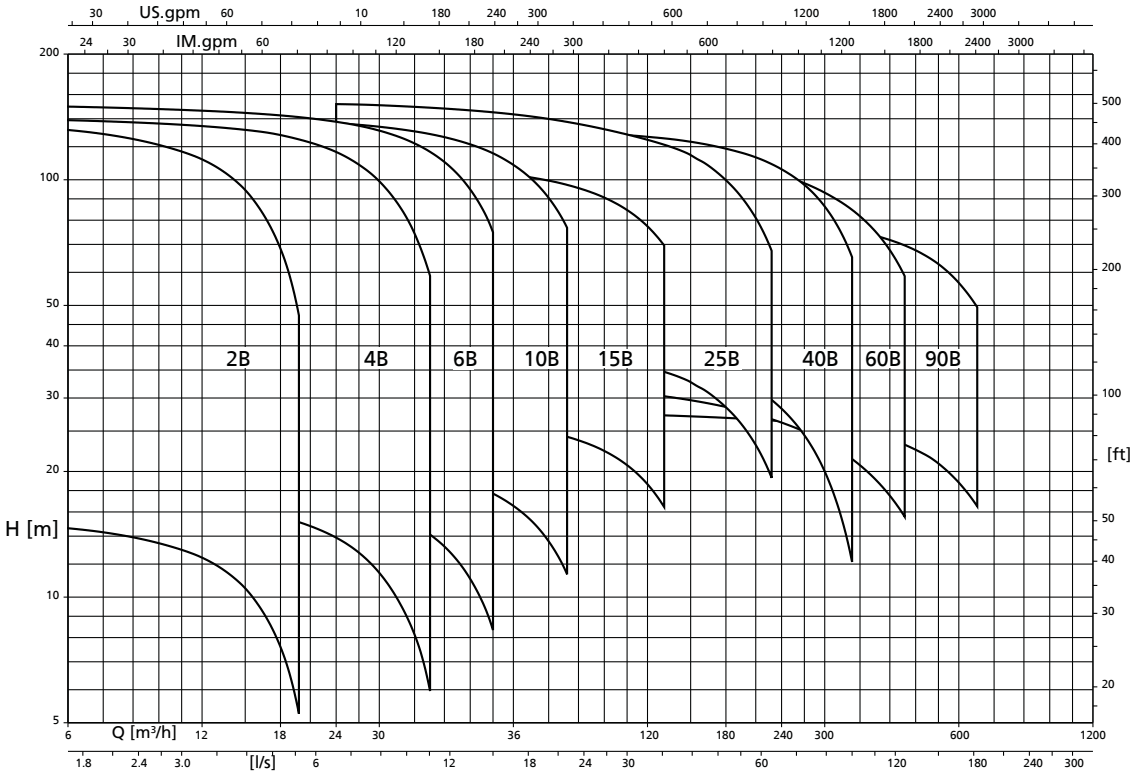

Characteristic curves

Hyamat V with Movitec 2B, n = 2900 rpm

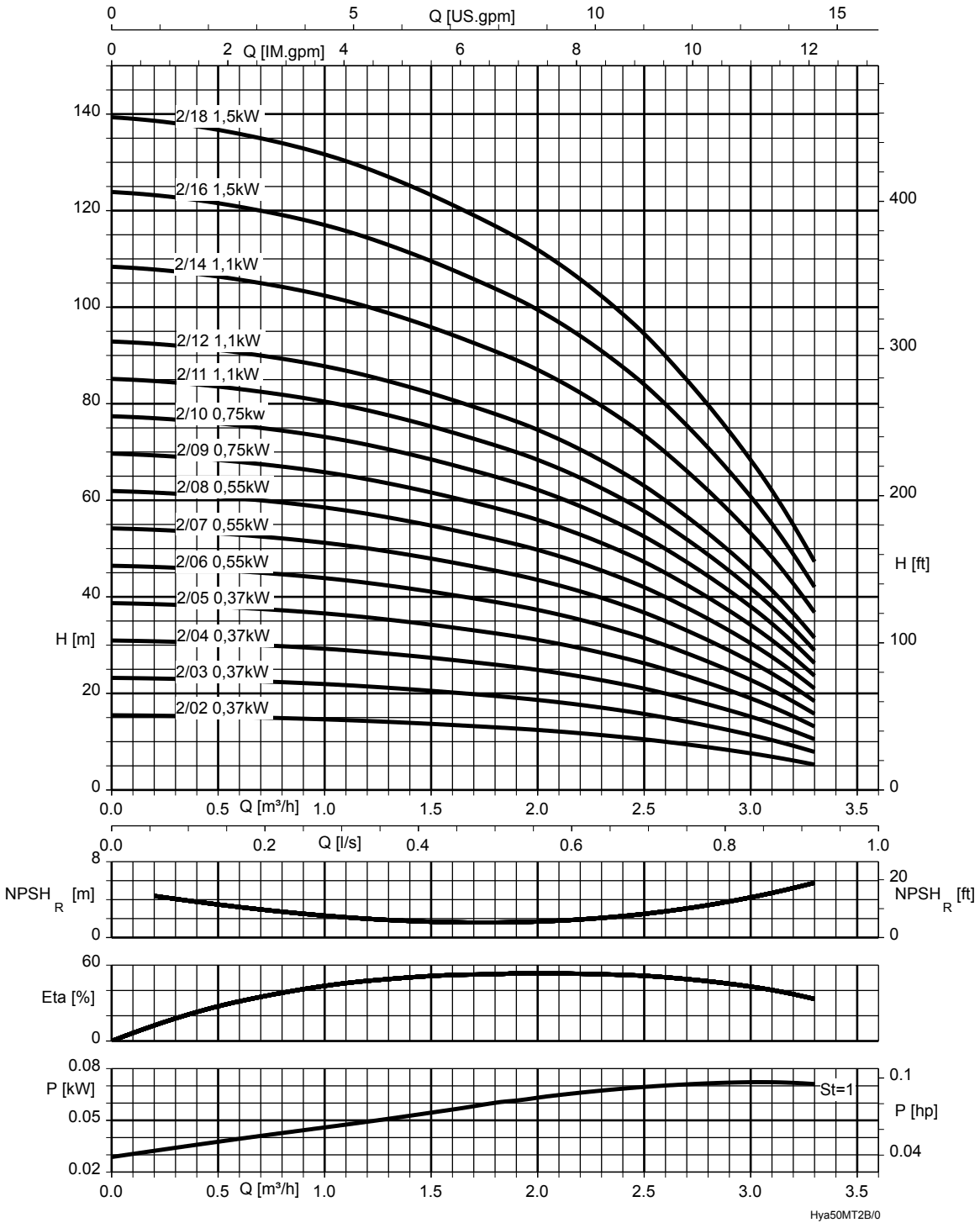

The flow rate in the characteristic curve is based on one duty pump:
The flow rate of a stand-by pump, if any, is not taken into account when calculating the flow rate required.

St = 1	P per stage

Flow rates for multiple pump systems (⇨ Page 7)

Hyamat V with Movitec 4B, n = 2900 rpm

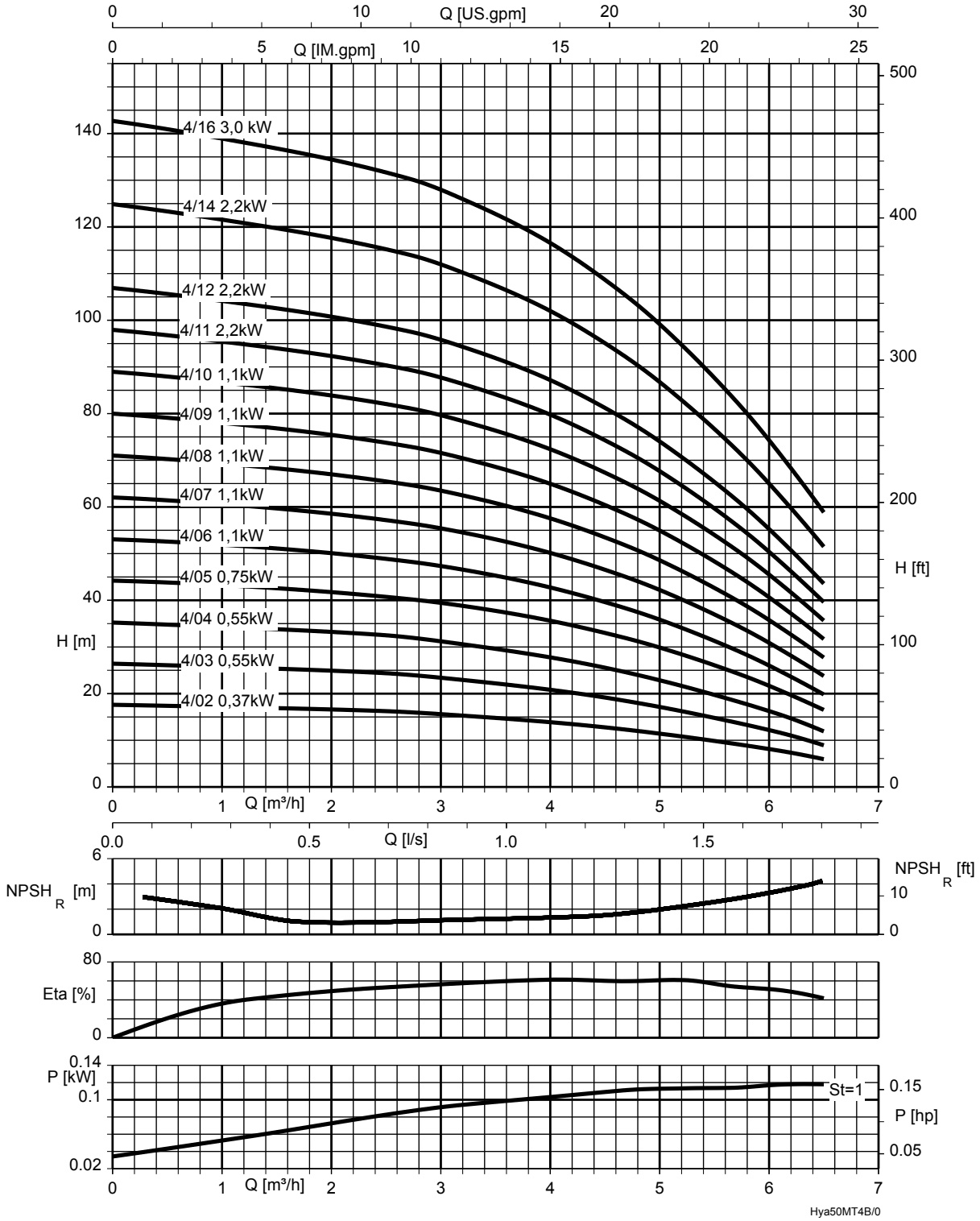

The flow rate in the characteristic curve is based on one duty pump:
The flow rate of a stand-by pump, if any, is not taken into account when calculating the flow rate required.

St = 1	P per stage

Flow rates for multiple pump systems (⇨ Page 7)

Hyamat V with Movitec 6B, n = 2900 rpm

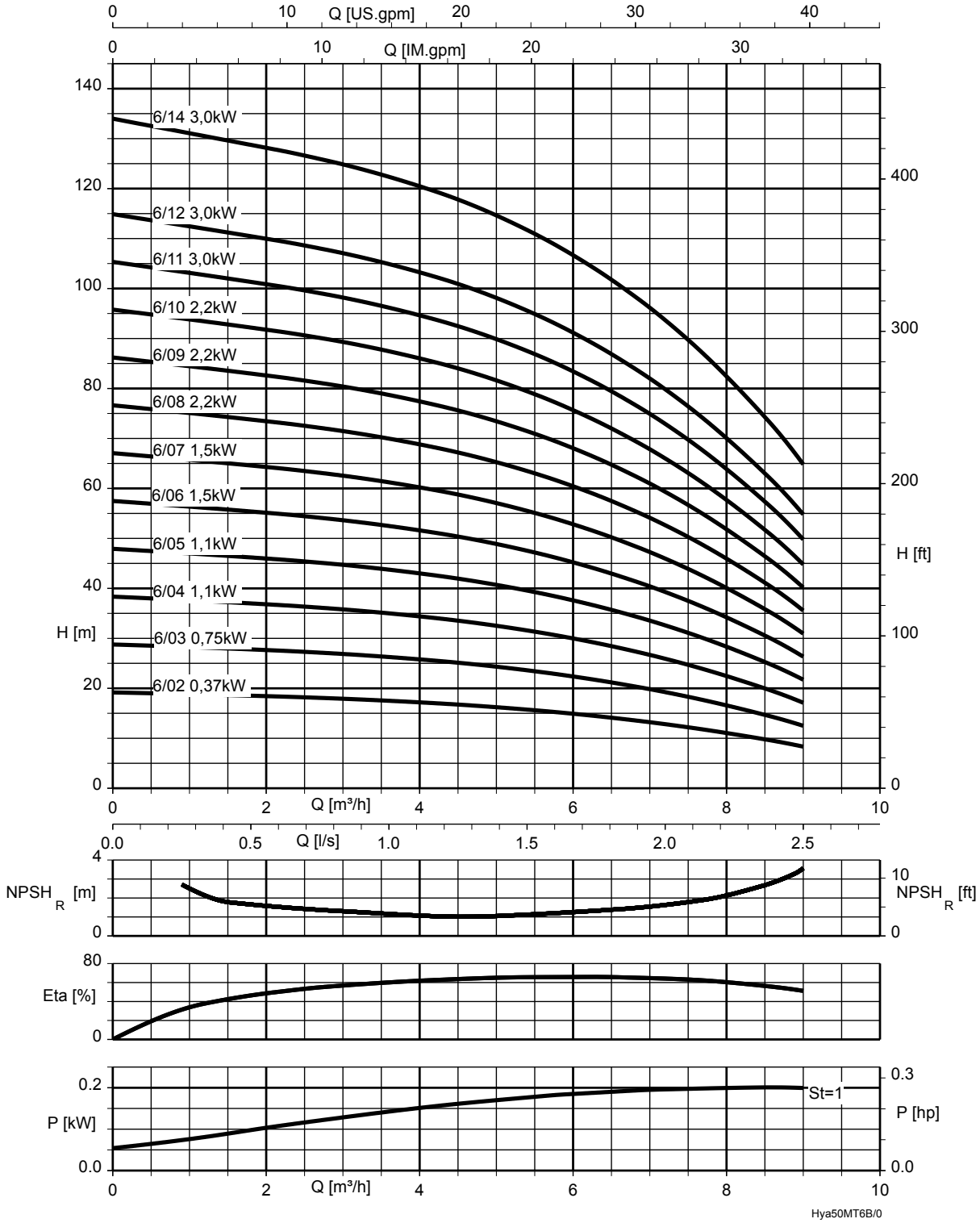

The flow rate in the characteristic curve is based on one duty pump:
The flow rate of a stand-by pump, if any, is not taken into account when calculating the flow rate required.

St = 1	P per stage

Flow rates for multiple pump systems (⇨ Page 7)

Hyamat V with Movitec 10B, n = 2900 rpm

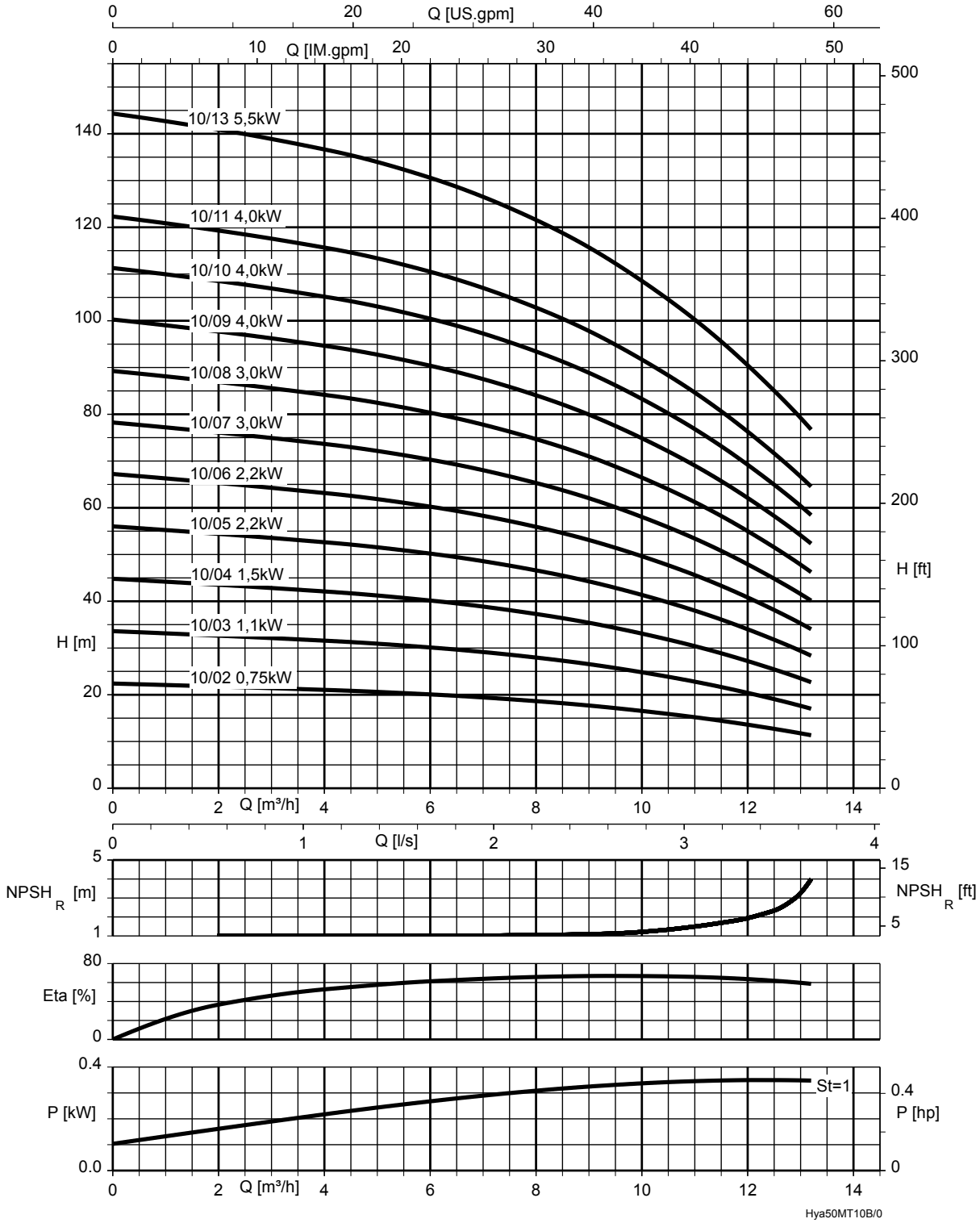

The flow rate in the characteristic curve is based on one duty pump:
The flow rate of a stand-by pump, if any, is not taken into account when calculating the flow rate required.

St = 1	P per stage

Flow rates for multiple pump systems (⇨ Page 7)

Hyamat V with Movitec 15B, n = 2900 rpm

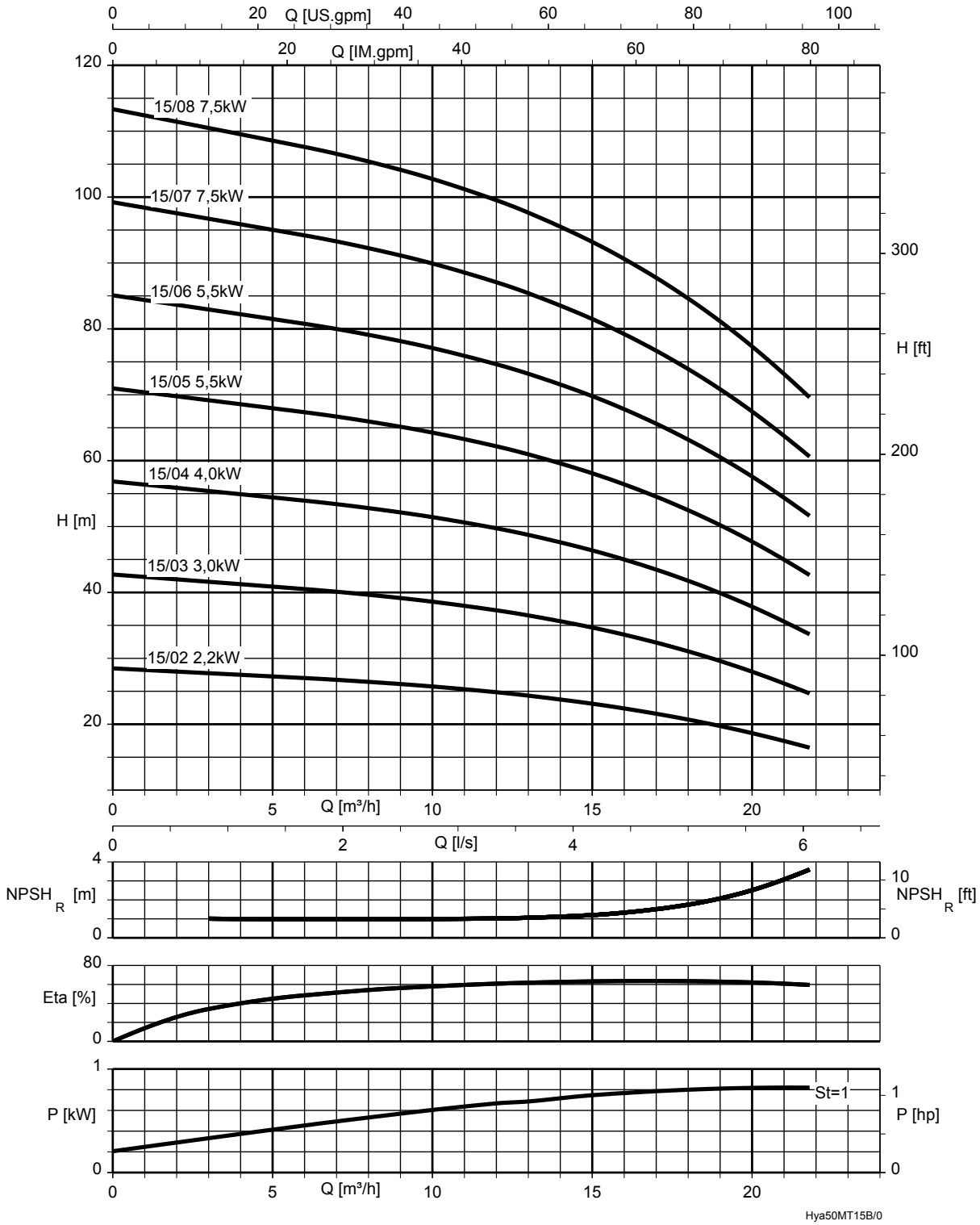

The flow rate in the characteristic curve is based on one duty pump:
The flow rate of a stand-by pump, if any, is not taken into account when calculating the flow rate required.

St = 1	P per stage

Flow rates for multiple pump systems (⇨ Page 7)

Hyamat V with Movitec 25B, n = 2900 rpm

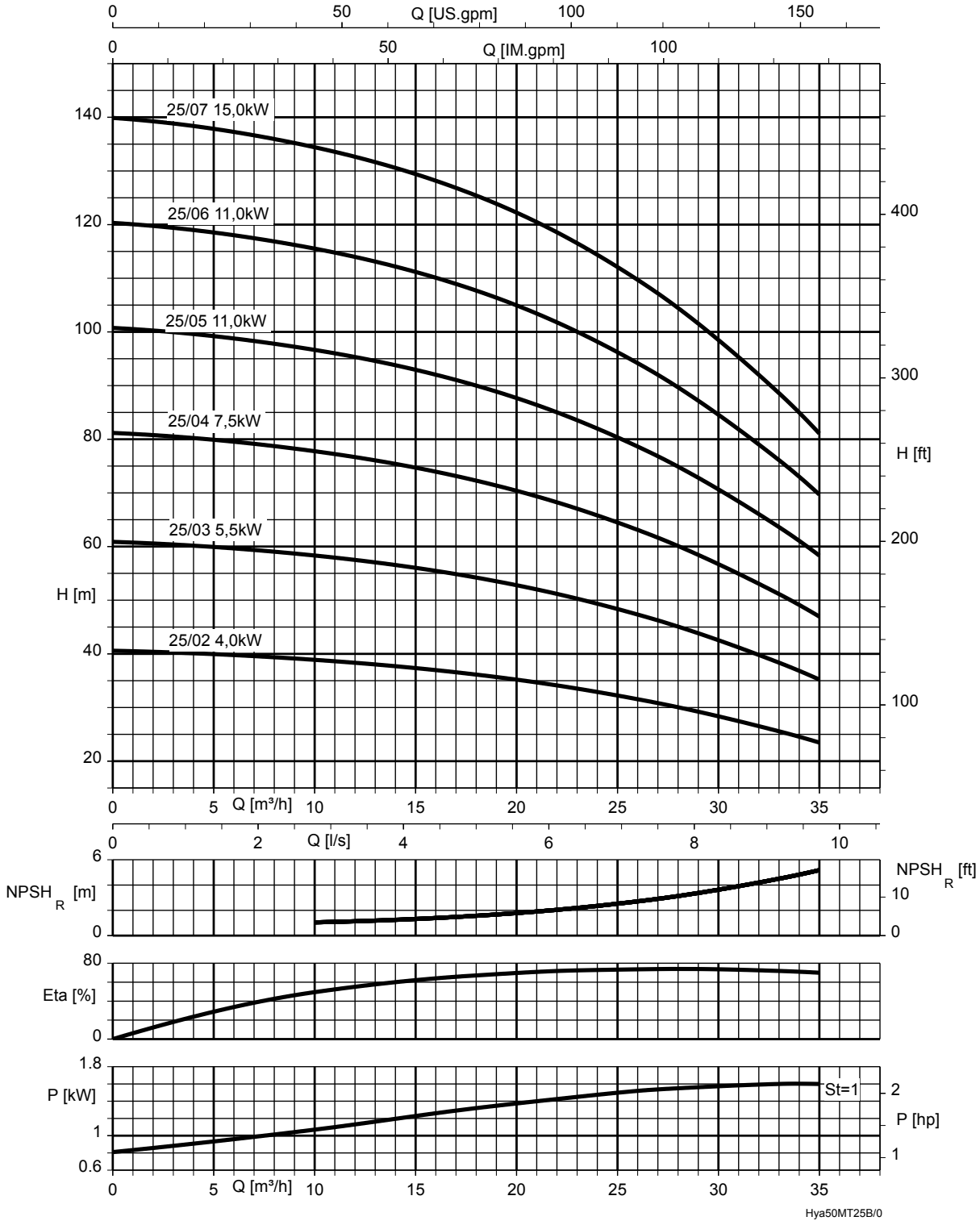

The flow rate in the characteristic curve is based on one duty pump:
The flow rate of a stand-by pump, if any, is not taken into account when calculating the flow rate required.

St = 1	P per stage

Flow rates for multiple pump systems (⇨ Page 7)

Hyamat V with Movitec 40B, n = 2900 rpm

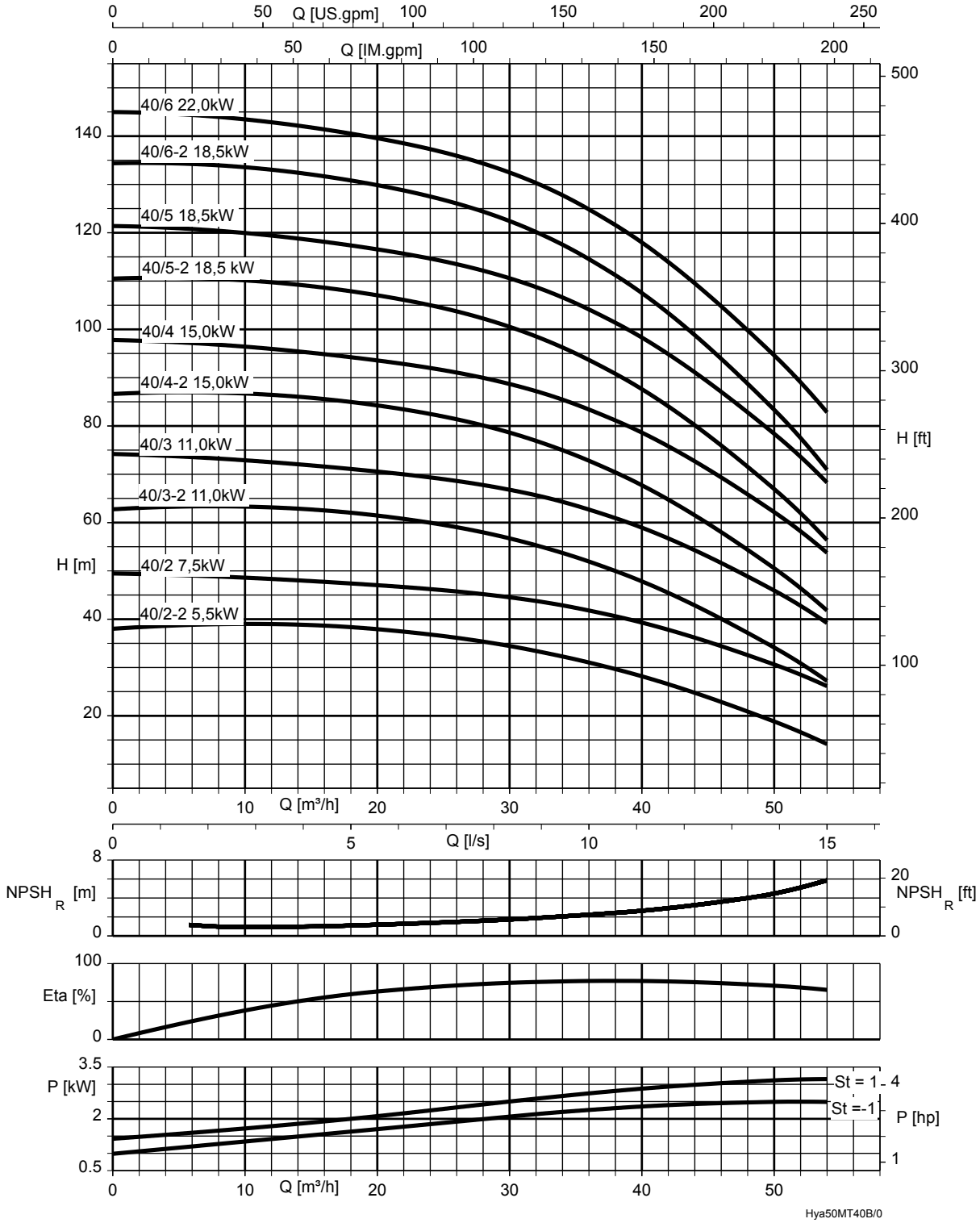

The flow rate in the characteristic curve is based on one duty pump:
The flow rate of a stand-by pump, if any, is not taken into account when calculating the flow rate required.

St = 1	P per stage	St = -1	P per stage with a smaller impeller

Flow rates for multiple pump systems (⇨ Page 7)

Hyamat V with Movitec 60B, n = 2900 rpm

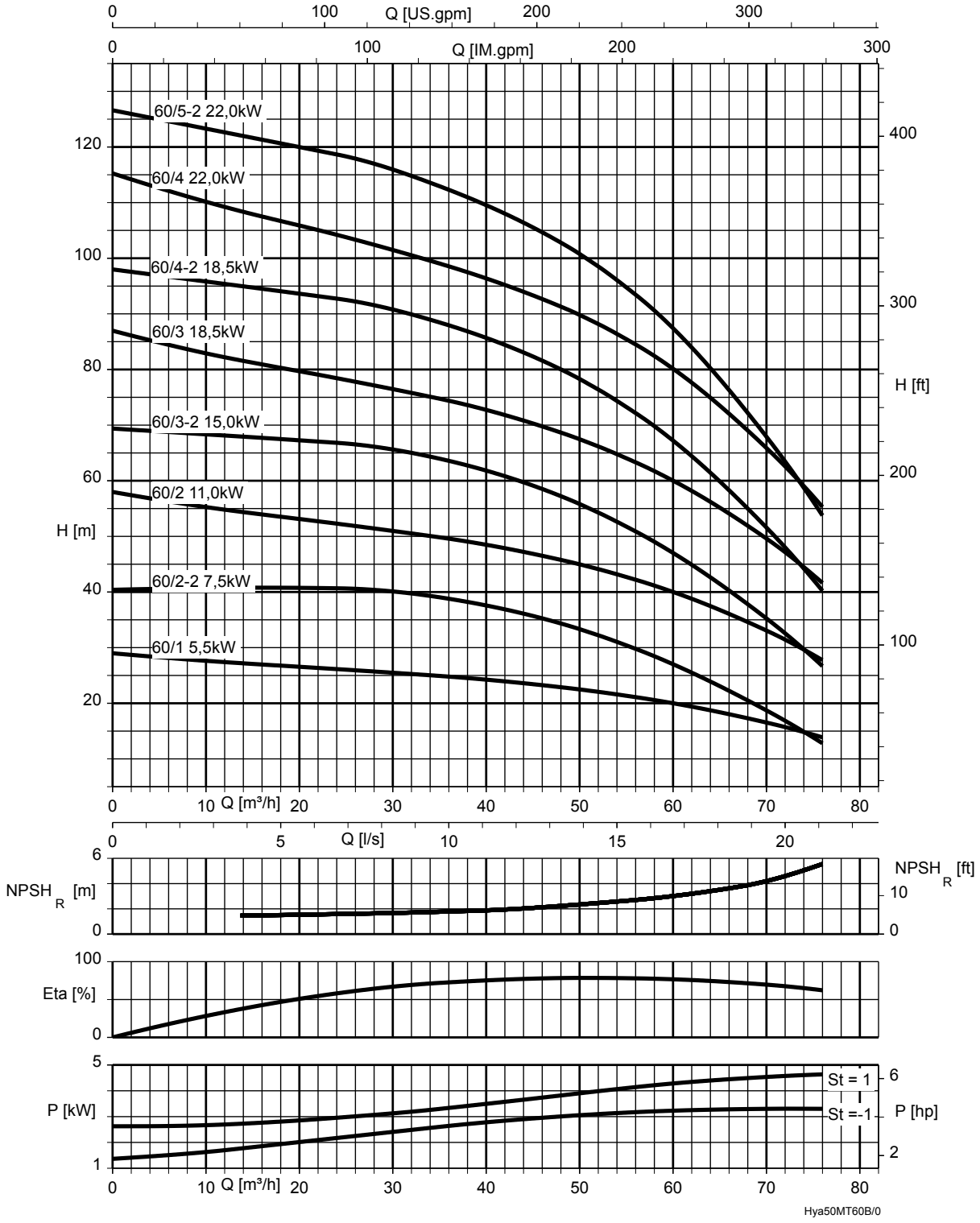

The flow rate in the characteristic curve is based on one duty pump:
The flow rate of a stand-by pump, if any, is not taken into account when calculating the flow rate required.

St = 1	P per stage	St = -1	P per stage with a smaller impeller

Flow rates for multiple pump systems (⇨ Page 7)

Hyamat V with Movitec 90B, n = 2900 rpm

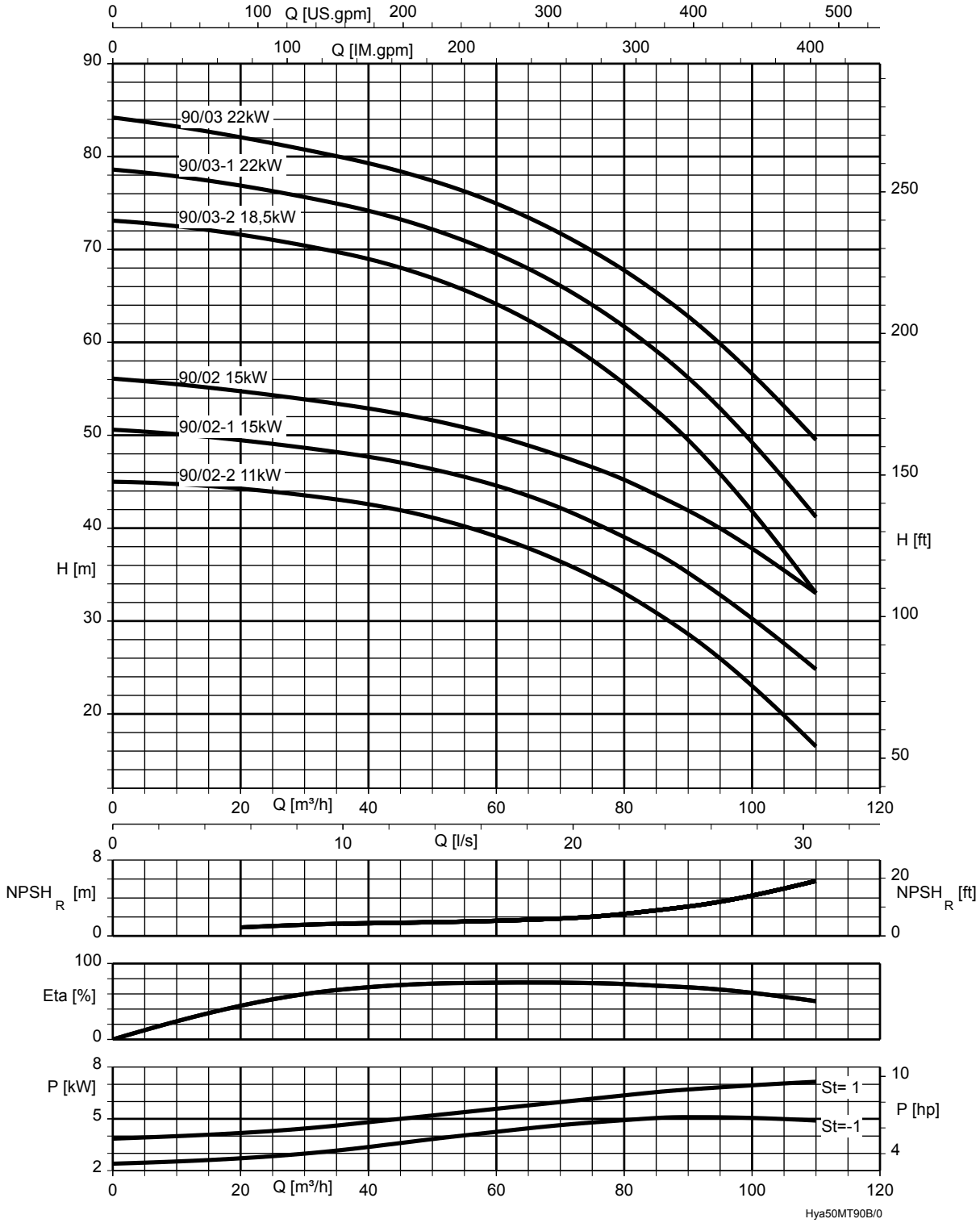

The flow rate in the characteristic curve is based on one duty pump:
The flow rate of a stand-by pump, if any, is not taken into account when calculating the flow rate required.

St = 1	P per stage	St = -1	P per stage with a smaller impeller

Flow rates for multiple pump systems (⇨ Page 7)

Dimensions and weights

Hyamat V with Movitec 2B / 4B / 6B / 10B / 15B

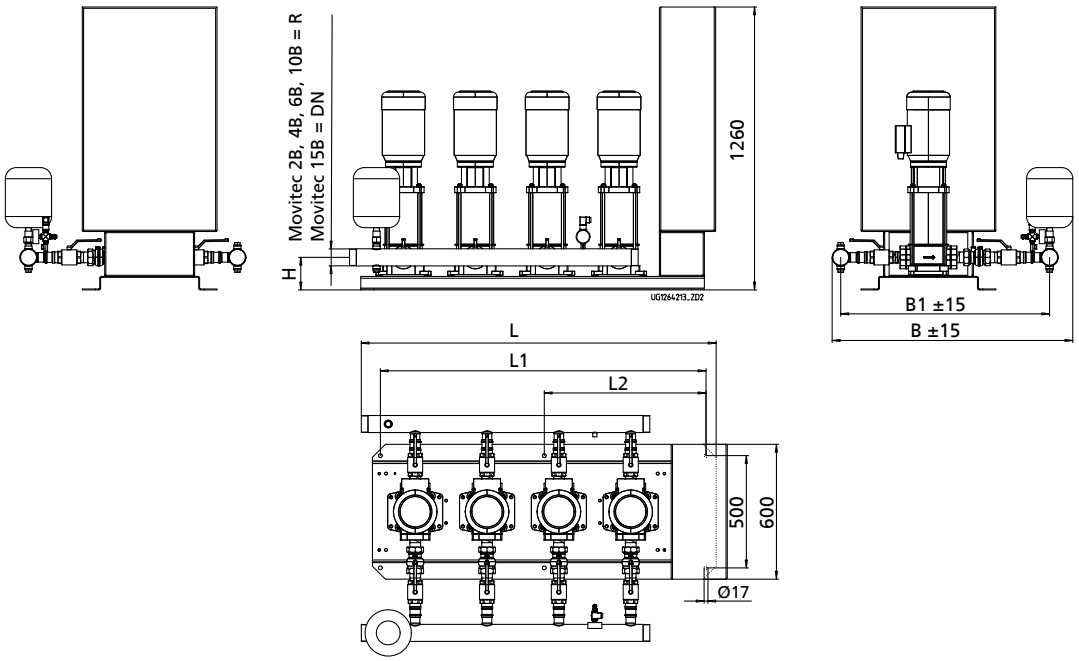

Dimensions of Hyamat V with Movitec 2B / 4B / 6B / 10B / 15B
Control cabinet dimensions, Hyamat V (⇨ Page 23)
Flanges drilled to EN 1092-1 PN 16
Baseplate RAL 5002, control unit RAL 7035

Dimensions [mm]

Size	Connection	B	B1	H1	L	L1	L2
2/02.. B	R 2	896	763	115	825	670	-
2/04.. B	R 2	896	763	115	825	670	-
2/06.. B	R 2	961	828	115	825	670	-
2/10.. B	R 2	1050	916	145	985	900	-
2/15.. B	DN 80	1097	894	145	980	900	-
3/02.. B	R 2	896	763	115	1055	900	-
3/04.. B	R 2	896	763	115	1055	900	-
3/06.. B	R 2	961	828	115	1055	900	-
3/10.. B	R 2 1/2	1073	932	145	1260	1130	560
3/15.. B	DN 80	1097	894	145	1210	1130	560
4/02.. B	R 2	896	763	115	1285	1130	560
4/04.. B	R 2	896	763	115	1285	1130	560
4/06.. B	R 2	961	828	115	1285	1130	560
4/10.. B	R 2 1/2	1073	932	145	1580	1450	720
4/15.. B	DN 100	1272	1052	145	1544	1450	720
5/02.. B	R 2 1/2	920	778	115	1605	1450	720
5/04.. B	R 2 1/2	920	778	115	1605	1450	720
5/06.. B	R 2 1/2	987	846	115	1605	1450	720
5/10.. B	R 2 1/2	1073	932	145	1900	1770	880
5/15.. B	DN 100	1221	1001	145	1850	1770	880
6/02.. B	R 2 1/2	920	778	115	1925	1770	880
6/04.. B	R 2 1/2	920	778	115	1925	1770	880
6/06.. B	R 2 1/2	987	846	115	1925	1770	880

Size	Connection	B	B1	H1	L	L1	L2
6/10.. B	R 3	1090	943	145	2220	2090	1040
6/15.. B	DN 150	1352	1067	145	2170	2090	1040

Hyamat V with Movitec 25B / 40B / 60B / 90B

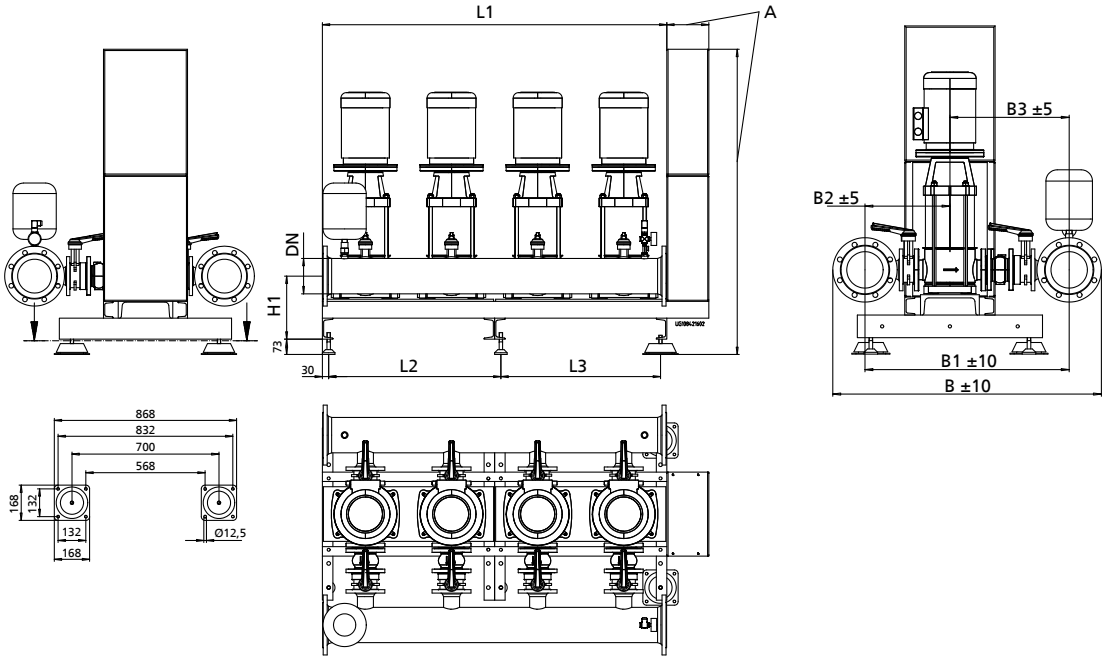

Dimensions of Hyamat V with Movitec 25B / 40B / 60B / 90B
A = control cabinet dimensions, Hyamat V (⇨ Page 23)
Flanges drilled to EN 1092-1 PN 16
Baseplate RAL 5002, control unit RAL 7035

Dimensions [mm]

Size	Connection	B	B1	B2	B3	H1	L1	L2	L3
2/25.. B	DN 100	1074	854	351	503	302	820	-	760
2/40.. B	DN 100	1139	919	374	545	337	820	-	760
2/60.. B	DN 150	1320	1035	431	604	337	820	-	760
2/90.. B	DN 150	1335	1050	439	611	337	820	-	760
3/25.. B	DN 100	1074	854	351	503	302	1230	-	1170
3/40.. B	DN 150	1248	963	396	567	337	1230	-	1170
3/60.. B	DN 150	1320	1035	431	604	337	1230	-	1170
3/90.. B	DN 200	1436	1096	462	634	337	1230	-	1170
4/25.. B	DN 150	1189	904	376	528	302	1640	820	760
4/40.. B	DN 150	1248	963	396	567	337	1640	820	760
4/60.. B	DN 200	1421	1081	454	627	337	1640	820	760
4/90.. B	DN 200	1436	1096	462	634	337	1640	820	760
5/25.. B	DN 150	1189	904	376	528	302	2050	1230	760
5/40.. B	DN 200	1349	1009	419	590	337	2050	1230	760
5/60.. B	DN 200	1421	1081	454	627	337	2050	1230	760
5/90.. B	DN 250	1561	1156	492	664	337	2050	1230	760
6/25.. B	DN 150	1189	904	376	528	302	2460	1230	1170
6/40.. B	DN 200	1349	1009	419	590	337	2460	1230	1170
6/60.. B	DN 200	1421	1081	454	627	337	2460	1230	1170
6/90.. B	DN 250	1561	1156	492	664	337	2460	1230	1170

Control cabinet – Hyamat V with Movitec 2B / 4B / 6B / 10B / 15B / 25B / 40B / 60B / 90B

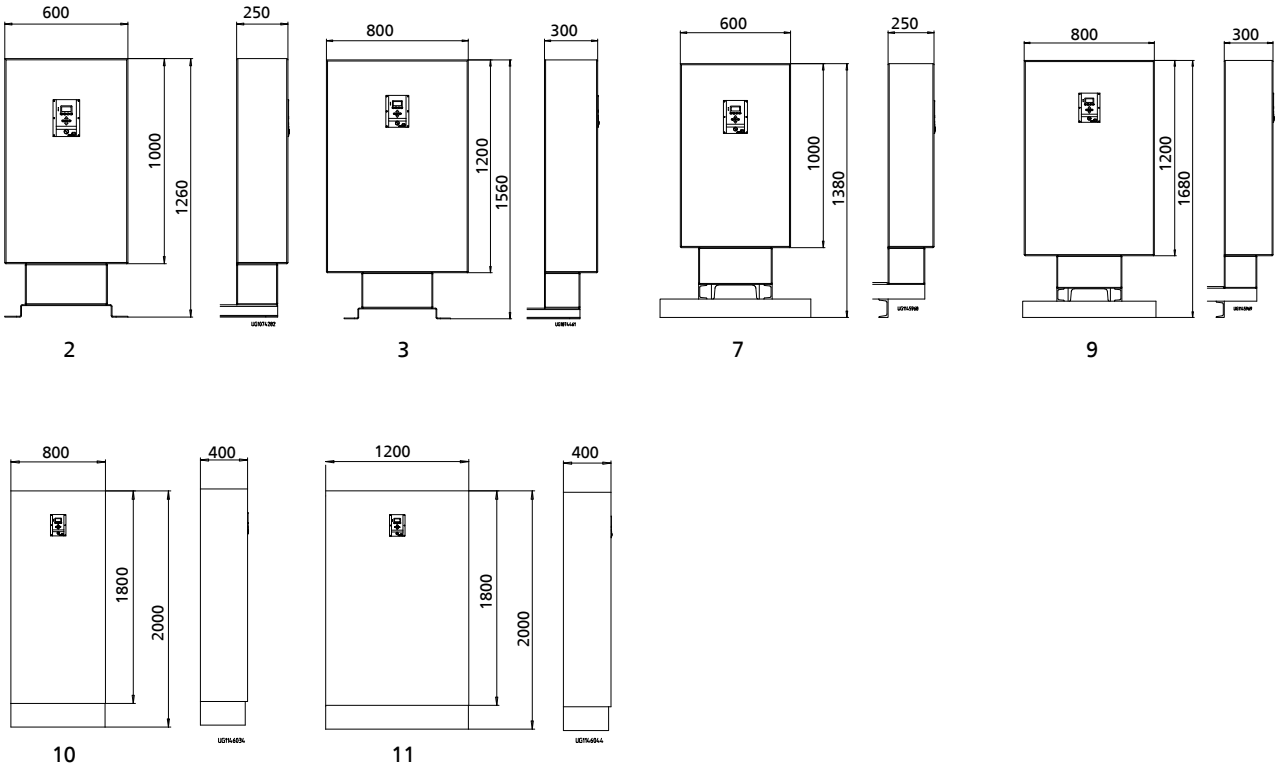

Control cabinet dimensions for Hyamat V [mm]

The control cabinet dimensions refer to systems in the standard design. Larger control cabinets may be required for installing other optional equipment.

Combinations of Hyamat V systems and control cabinet dimensions

Hyamat V	P [kW] (per pump)						
	4,00	5,50	7,50	11,00	15,00	18,50	22,00
2/02.. B	2	3	3	-	-	-	-
2/04.. B	2	3	3	-	-	-	-
2/06.. B	2	3	3	-	-	-	-
2/10.. B	2	3	3	-	-	-	-
2/15.. B	2	3	3	-	-	-	-
2/25.. B	7	9	9	9	9	10	10
2/40.. B	7	9	9	9	9	10	10
2/60.. B	7	9	9	9	9	10	10
2/90.. B	7	9	9	9	9	10	10
3/02.. B	2	3	3	-	-	-	-
3/04.. B	2	3	3	-	-	-	-
3/06.. B	2	3	3	-	-	-	-
3/10.. B	2	3	3	-	-	-	-
3/15.. B	2	3	3	-	-	-	-
3/25.. B	7	9	9	9	9	10	10
3/40.. B	7	9	9	9	9	10	10
3/60.. B	7	9	9	9	9	10	10
3/90.. B	7	9	9	9	9	10	10
4/02.. B	2	3	3	-	-	-	-
4/04.. B	2	3	3	-	-	-	-
4/06.. B	2	3	3	-	-	-	-
4/10.. B	2	3	3	-	-	-	-
4/15.. B	2	3	3	-	-	-	-
4/25.. B	7	9	9	9	9	11	11
4/40.. B	7	9	9	9	9	11	11

Hyamat V	P [kW] (per pump)						
	4,00	5,50	7,50	11,00	15,00	18,50	22,00
4/60.. B	7	9	9	9	9	11	11
4/90.. B	7	9	9	9	9	11	11
5/02.. B	2	10	10	-	-	-	-
5/04.. B	2	10	10	-	-	-	-
5/06.. B	2	10	10	-	-	-	-
5/10.. B	2	10	10	-	-	-	-
5/15.. B	2	10	10	-	-	-	-
5/25.. B	7	10	10	11	11	11	11
5/40.. B	7	10	10	11	11	11	11
5/60.. B	7	10	10	11	11	11	11
5/90.. B	7	10	10	11	11	11	11
6/02.. B	2	10	10	-	-	-	-
6/04.. B	2	10	10	-	-	-	-
6/06.. B	2	10	10	-	-	-	-
6/10.. B	2	10	10	-	-	-	-
6/15.. B	2	10	10	-	-	-	-
6/25.. B	7	10	10	11	11	11	11
6/40.. B	7	10	10	11	11	11	11
6/60.. B	7	10	10	11	11	11	11
6/90.. B	7	10	10	11	11	11	11

Weights

Weights of the system in [kg]

Hyamat V	1	2-2	2-1	2	3-2	3-1	3	4-2	4	5-2	5	6-2	6	7	8	9	10	11	12	13	14	16	18
2/B 02../..	-	-	-	136	-	-	136	-	137	-	138	-	142	143	144	149	149	155	156	-	158	167	168
3/B 02../..	-	-	-	172	-	-	173	-	174	-	176	-	182	183	184	191	193	202	203	-	205	218	221
4/B 02../..	-	-	-	211	-	-	213	-	214	-	216	-	225	226	228	237	239	251	252	-	256	273	277
5/B 02../..	-	-	-	256	-	-	258	-	260	-	262	-	274	276	278	289	291	306	308	-	312	334	338
6/B 02../..	-	-	-	297	-	-	299	-	302	-	304	-	317	320	322	336	338	356	359	-	363	390	395
2/B 04../..	-	-	-	136	-	-	140	-	141	-	145	-	151	152	160	161	162	168	170	-	171	200	-
3/B 04../..	-	-	-	172	-	-	178	-	181	-	187	-	196	197	208	210	212	220	223	-	226	268	-
4/B 04../..	-	-	-	212	-	-	220	-	223	-	231	-	243	244	259	262	264	276	279	-	283	340	-
5/B 04../..	-	-	-	257	-	-	268	-	271	-	281	-	296	298	316	320	322	338	342	-	346	417	-
6/B 04../..	-	-	-	297	-	-	310	-	314	-	326	-	344	347	369	374	376	394	399	-	404	489	-
2/B 06../	-	-	-	138	-	-	146	-	152	-	153	-	161	162	169	170	171	191	192	-	193	-	-
3/B 06../..	-	-	-	174	-	-	186	-	195	-	197	-	209	210	221	222	224	254	255	-	256	-	-
4/B 06../..	-	-	-	214	-	-	230	-	242	-	244	-	260	262	276	278	280	320	321	-	323	-	-
5/B 06../..	-	-	-	258	-	-	278	-	283	-	296	-	316	318	336	338	341	390	392	-	395	-	-
6/B 06../..	-	-	-	297	-	-	322	-	339	-	342	-	367	370	391	394	397	456	459	-	462	-	-
2/B 10../..	-	-	-	171	-	-	177	-	187	-	194	-	196	214	216	229	231	233	-	315	-	-	-
3/B 10../..	-	-	-	224	-	-	234	-	250	-	260	-	263	289	292	312	314	317	-	441	-	-	-
4/B 10../..	-	-	-	281	-	-	294	-	315	-	329	-	333	368	372	397	401	405	-	570	-	-	-
5/B 10../..	-	-	-	342	-	-	358	-	384	-	402	-	406	450	455	487	492	497	-	708	-	-	-
6/B 10../..	-	-	-	398	-	-	417	-	448	-	469	-	475	528	533	572	578	584	-	836	-	-	-
2/B 15../..	-	-	-	211	-	-	230	-	242	-	320	-	322	332	337	-	-	-	-	-	-	-	-
3/B 15../..	-	-	-	282	-	-	309	-	327	-	444	-	447	462	469	-	-	-	-	-	-	-	-
4/B 15../..	-	-	-	369	-	-	406	-	430	-	586	-	590	609	619	-	-	-	-	-	-	-	-
5/B 15../..	-	-	-	580	-	-	626	-	656	-	856	-	860	885	898	-	-	-	-	-	-	-	-
6/B 15../..	-	-	-	705	-	-	761	-	797	-	1036	-	1041	1071	1086	-	-	-	-	-	-	-	-
2/B 25../..	-	-	-	396	-	-	455	-	469	-	699	-	705	729	-	-	-	-	-	-	-	-	-
3/B 25../..	-	-	-	546	-	-	634	-	654	-	980	-	988	1024	-	-	-	-	-	-	-	-	-
4/B 25../..	-	-	-	760	-	-	877	-	905	-	1325	-	1337	1385	-	-	-	-	-	-	-	-	-
5/B 25../..	-	-	-	948	-	-	1100	-	1134	-	1644	-	1660	1720	-	-	-	-	-	-	-	-	-
6/B 25../..	-	-	-	1104	-	-	1235	-	1277	-	1932	-	1950	2022	-	-	-	-	-	-	-	-	-
2/B 40../..	-	411	-	419	627	-	628	632	660	682	712	717	789	-	-	-	-	-	-	-	-	-	-
3/B 40../..	-	616	-	629	922	-	922	929	971	1004	1048	1056	1163	-	-	-	-	-	-	-	-	-	-
4/B 40../..	-	793	-	810	1187	-	1187	1196	1252	1296	1356	1366	1509	-	-	-	-	-	-	-	-	-	-
5/B 40../..	-	1094	-	1114	1571	-	1572	1583	1653	1708	1782	1794	1974	-	-	-	-	-	-	-	-	-	-
6/B 40../..	-	1274	-	1298	1839	-	1840	1854	1938	2003	2093	2107	2323	-	-	-	-	-	-	-	-	-	-
2/B 60../..	481	496	-	701	736	-	760	796	875	882	-	-	-	-	-	-	-	-	-	-	-	-	-
3/B 60../..	638	660	-	948	1000	-	1036	1091	1209	1220	-	-	-	-	-	-	-	-	-	-	-	-	-
4/B 60../..	926	956	-	1326	1396	-	1443	1517	1674	1688	-	-	-	-	-	-	-	-	-	-	-	-	-
5/B 60../..	1175	1212	-	1660	1747	-	1806	1898	2096	2112	-	-	-	-	-	-	-	-	-	-	-	-	-
6/B 60../..	1369	1413	-	1944	2048	-	2120	2230	2467	2487	-	-	-	-	-	-	-	-	-	-	-	-	-
2/B 90/..	-	822	834	834	905	977	977	-	-	-	-	-	-	-	-	-	-	-	-	-	-	-	-
3/B 90/..	-	1178	1196	1196	1302	1388	1388	-	-	-	-	-	-	-	-	-	-	-	-	-	-	-	-
4/B 90/..	-	1568	1592	1592	1734	1878	1878	-	-	-	-	-	-	-	-	-	-	-	-	-	-	-	-
5/B 90/..	-	2098	2128	2128	2306	2486	2486	-	-	-	-	-	-	-	-	-	-	-	-	-	-	-	-
6/B 90/..	-	2463	2499	2499	2712	2928	2928	-	-	-	-	-	-	-	-	-	-	-	-	-	-	-	-

Scope of supply

Depending on the model, the following items are included in the scope of supply:

Pressure booster system

- Two to six vertical high-pressure centrifugal pumps (standard pumps)

For Movitec 2B, 4B, 6B, 10B and 15B:

- With oval/round flange

For Movitec 25B, 40B, 60B and 90B:

- With round flange
- Membrane-type accumulator on the discharge side, approved for drinking water
- Pressure transmitter on the discharge side
- Pressure gauge
- Powder-coated / epoxy resin-coated steel baseplate

For Movitec 2B, 4B, 6B, 10B and 15B:

- Pumps mounted on the baseplate with anti-vibration mounts

For Movitec 25B, 40B, 60B and 90B:

- Pressure booster system with level-adjustable feet and rubber pads (supplied but not fitted)

Per pump:

- Check valve
- Shut-off valves

Control cabinet

- Control cabinet IP54
- Pump control and monitoring unit
- Graphical display with operating panel
- LEDs indicating operational availability and fault of the pressure booster system
- Service interface for connection to a PC
- Transformer for control voltage
- Motor protection switch per pump
- Lockable master switch (repair switch)
- Terminal strip/terminals with identification for all connections
- Circuit diagram and list of electric components

- Connection for analog or digital dry running protection equipment
- External connection ON
- External connection OFF

Accessories

See the separate type series booklet Accessories for Pressure Booster Systems 1954.5.

18.05.2016

1953.51/13-EN

KSB Aktiengesellschaft
67225 Frankenthal • Johann-Klein-Str. 9 • 67227 Frankenthal (Germany)
Tel. +49 6233 86-0 • Fax +49 6233 86-3401
www.ksb.com