www.IranEbara.com

EBARA

CONTENTS

50Hz

Rev. H

	Page
- SPECIFICATIONS	
PUMP SPECIFICATIONS	200-201
TYPE KEY	202
SELECTION CHART	203
PERFORMANCE RANGE	204
PERFORMANCE CURVE 32-125	205
PERFORMANCE CURVE 32-160	206
PERFORMANCE CURVE 32-200	207
PERFORMANCE CURVE 40-125	208
PERFORMANCE CURVE 40-160	209
PERFORMANCE CURVE 40-200	210
PERFORMANCE CURVE 50-125	211
PERFORMANCE CURVE 50-160	212
PERFORMANCE CURVE 50-200	213
PERFORMANCE CURVE 65-125	214
PERFORMANCE CURVE 65-160	215
PERFORMANCE CURVE 65-200	216
PERFORMANCE CURVE 65-250	217
PERFORMANCE CURVE 80-160	218
PERFORMANCE CURVE 80-200	219
PERFORMANCE CURVE 80-250	220
- CONSTRUCTIONS	
SECTIONAL VIEW 3SF-3LSF (32,40,50,65-125/160/200)	300
CONSTRUCTIONS 3SF-3LSF (32,40,50,65-125/160/200)	301
SECTIONAL VIEW 3LSF 80-160	302
CONSTRUCTIONS 3LSF 80-160	303
SECTIONAL VIEW 3LSF (65-250, 80-200/250)	304
CONSTRUCTIONS 3LSF (65-250, 80-200/250)	305
SECTIONAL VIEW 3PF-3LPF (32,40,50,65-125/160/200)	306
CONSTRUCTIONS 3PF-3LPF (32,40,50,65-125/160/200)	307
SECTIONAL VIEW 3LPF 80-160	308
CONSTRUCTIONS 3LPF 80-160	309
SECTIONAL VIEW 3LPF (65-250, 80-200/250)	310
CONSTRUCTIONS 3LPF (65-250, 80-200/250)	311
CONSTRUCTIONS: BALL BEARING	312
CONSTRUCTIONS: MECHANICAL SEAL (standard, H and special version)	313
CONSTRUCTIONS: MECHANICAL SEAL (L Ø22)	314
CONSTRUCTIONS: MECHANICAL SEAL (L Ø30-35)	315
CONSTRUCTIONS: MECHANICAL SEAL (HS Ø22 and special version)	316
CONSTRUCTIONS: MECHANICAL SEAL (HS Ø30 and special version)	317
CONSTRUCTIONS: COUPLING	318
CONSTRUCTIONS: COUNTERFLANGE	319
CONSTRUCTIONS: COUNTERFLANGE	320

CONTENTS

50Hz

Rev. H

- DIMENSIONS

DIMENSIONS 3SF-3LSF (32,40,50,65-125/160)	400
DIMENSIONS 3SF-3LSF (50,65-160/200)	401
DIMENSIONS 3LSF (80-160)	402
DIMENSIONS 3LSF (65-250,80)	403
DIMENSIONS 3PF-3LPF (32,40,50,65-125/160/200)	404
DIMENSIONS 3LPF (65-250,80)	405
PACKING AND WEIGHT 3SF-3LSF	406
PACKING AND WEIGHT 3PF-3LPF	407

SPECIFICATIONS

50Hz

Rev. H

Pump sizes			Version	**3SF**	**3PF**	**3LSF**	**3LPF**
			32-125	■	■	●	●
			32-160	■	■	●	●
			32-200	■	■	●	●
			40-125	■	■	●	●
			40-160	■	■	●	●
			40-200	■	■	●	●
			50-125	■	■	●	●
			50-160	■	■	●	●
			50-200	■	■	●	●
			65-125	■	■	●	●
			65-160	■	■	●	●
			65-200	■	■	●	●
			65-250	-	-	●	●
			80-160	-	-	●	●
			80-200	-	-	●	●
			80-250	-	-	▲	▲
Liquid Handled	Type of liquid			Clean water and moderately aggressive fluids			
				/		Clean water, drinking water, water contains glycol for E version	
	Temperature	min.	[℃]	-10		-10 -20 for E version, Q1AEGG, U3U3EGG, Q1U3EGG, Q1Q1EGG, U3CEGG	
		max.		90 (Standard, E, U3CEGG,Q1AEGG, Q1Q1EGG,Q1U3EGG,U3U3EGG) 110 for (H-HS-HW-HSW)		110 (L version, H-HW-HSW) 120 for E, ES version, Q1AEGG, U3U3EGG, Q1U3EGG, Q1Q1EGG, U3CEGG	
Maximum working pressure			[MPa]	1			

■ Available also with H-HS-HSW-HW-E option for 32, 40, 50, 65-125/160/200, Q1U3EGG, U3CEGG, Q1AEGG, Q1Q1EGG, U3U3EGG (U3U3EGG not available for models 65-160/15 and 65-200).

● Available also with H-HSW-HW-E option for 32, 40, 50, 65, 80-160/200, Q1AEGG, Q1Q1EGG, Q1U3EGG, U3CEGG, U3U3EGG.

▲ Available also with H-HW-HSW-ES version only for model 80-250

- Not Available

SPECIFICATIONS

50Hz

Rev. H

Version				3SF	3PF	3LSF	3 LPF
Construction	Impeller			Closed centrifugal typ e for [32, 40, 50 version]			
				Reinforced laser welding for [40-200/11, 50-200/15]			
				Closed centrifugal three dimensi onal blades for [65 and 80 version]			
	Shaft seal type			Mechanical seal		Mechanical seal with stationary ring secured against rotation. Mechanical seal for [H-E option]	
	Bearing			Sealed b all bearing			
Pipe Connection	Suction	32-125/160/200		Flange DN50 according DIN 2532 standard			
		40-125/160/200		Flange DN65 according DIN 2532 standard			
		50-125/160/200		Flange DN65 according DIN 2532 standard			
		65-125/160/200/250		Flange DN80 according DIN 2532 standard			
		80-160/200/250		Flange DN100 according DIN 2532 standard			
	Discharge	32-125/160/200		Flange DN32 according DIN 2532 standard			
		40-125/160/200		Flange DN40 according DIN 2532 standard			
		50-125/160/200		Flange DN50 according DIN 2532 standard			
		65-125/160/200/250		Flange DN65 according DIN 2532 standard			
		80-160/200/250		Flange DN80 according DIN 2532 standard			
Material	Casing	32-125/160/200		EN 1.4301 (AISI 304)		EN 1.4404 (AISI 316L)	
		40-125/160/200					
		50-125/160/200					
		65-125/160/200					
		65-250		/		EN 1.4401 (AISI 316) Made by precision casting	
		80-160/200/250					
	Impeller	32-125/160/200		EN 1.4301 (AISI 304)		EN 1.4404 (AISI 316L)	
		40-125/160/200					
		50-125/160/200					
		65-125/160/200		EN 1.440 1 (AISI 316) Made by pre cision casting			
		65-250		/		EN 1.4401 (AISI 316) Made by precision casting	
		80-160/200/250					
	Casing cover	32-125/160/200		EN 1.4301 (AISI 304)		EN 1.4404 (AISI 316L)	
		40-125/160/200					
		50-125/160/200					
		65-125/160/200					
		65-250		/		EN 1.4401 (AISI 316) Made by precision casting	
		80-160/200/250					
	Mechanical seal	32-125/160/200		Ceramic/Carbon/NBR (For version see page 313÷327)		SiC/SiC/FPM [L version] (For version see page 313÷327)	
		40-125/160/200					
		50-125/160/200					
		65-125/160/200					
		65-250		/			
		80-160/200					
		80-250				Carbon/SiC/EPDM [ES option]	
	O-ring			NBR FPM for [H-HS-HW-HSW option] EPDM for [E, U3U3EGG, Q1Q1EGG, Q1U3EGG, U3CEGG, Q1AEGG]		FPM for [L, H-HW-HSW] EPDM for [E, ES, U3U3EGG, Q1Q1EGG, Q1U3EGG, U3CEGG, Q1AEGG]	
	Shaft	32 , 40, 50 65-125 65-160/11	d=19	EN 1.4301 (AISI 304)		EN 1.4404 (AISI 316L)	
		50-200/15	d=22				
		65-160/15 65-200	d=24				
		65-250	d=24	/		EN 1.4462 (Duplex stainless steel)	
		80-160	d=24	/		EN 1.4404 (AISI 316L)	
		80-200/22	d=24	/		EN 1.4404 (AISI 316L)	
		80-200 30-37kW	d=24	/		EN 1.4462 (Duplex stainless steel)	
		80-250	d=29	/		EN 1.4462 (Duplex stainless steel)	
	Bracket			Cast iron - aluminium			

SELECTION CHART

50Hz

Rev. H

TYPE KEY

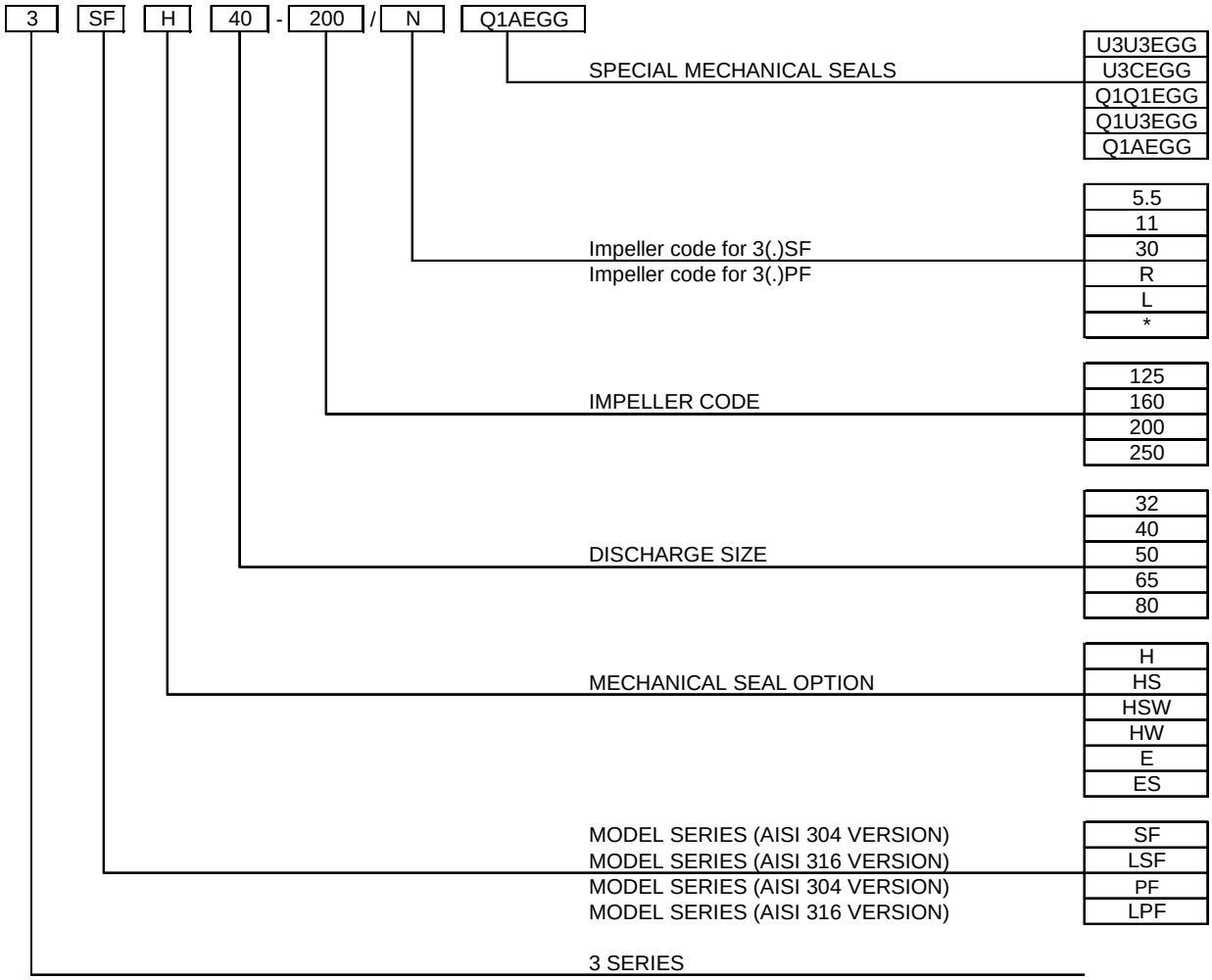

* = No indication

SELECTION CHART

50Hz

Rev. H

SELECTION CHART

3 SERIES SF and PF version: 32, 40, 50

Pump type		kW	HP	l/min	0	100	150	200	300	333	360	400	450	500	600	700	800	1000	1200
3(.)SF	3(.) PF			m³/h	0	6	9	12	18	20	22	24	27	30	36	42	48	60	72
32-125/1.1	32-125	1.1	1.5		22.5	21	19.9	18.4	14.1	12	-	-	-	-	-	-	-	-	-
32-160/1.5	32-160/R	1.5	2		29.5	28	26.5	24.5	19.2	17	-	-	-	-	-	-	-	-	-
32-160/2.2	32-160	2.2	3		37	35.5	34	32	27	25	-	-	-	-	-	-	-	-	-
32-200/3	32-200/R	3	4		44	42	40	37.5	31	28	-	-	-	-	-	-	-	-	-
32-200/4	32-200	4	5.5		55	53.5	52	49.5	43.5	40.5	38	-	-	-	-	-	-	-	-
32-200/5.5	32-200/L	5.5	7.5		70.5	69	67.5	65	58.5	-	-	-	-	-	-	-	-	-	-
32-200/7.5		7.5	10		70.5	69	67.5	65	58.5	55.5	53	49	44	-	-	-	-	-	-
40-125/1.5	40-125/R	1.5	2		20	-	-	19	17.6	17	16.5	15.7	14.5	13.2	10.3	7	-	-	-
40-125/2.2	40-125	2.2	3		26.5	-	-	25.5	24	23.5	23	22	21	19.5	16.4	13	-	-	-
40-160/3	40-160/R	3	4		31	-	-	29.5	27.5	27	26.5	25.5	24	22.5	20	17	-	-	-
40-160/4	40-160	4	5.5		40	-	-	38.5	37	36	35.5	34.5	33	32	29	25.5	-	-	-
40-200/5.5	40-200/R	5.5	7.5		47	-	-	45.5	44	43	42.5	41	39.5	38	35	31	-	-	-
40-200/7.5	40-200	7.5	10		58	-	-	57	55.5	55	54.5	53.5	52.5	51	47.5	44	-	-	-
40-200/11	40-200/L	11	15		72	-	-	71	70	70	69.5	68.5	67.5	66	63	59	-	-	-
50-125/2.2	50-125/S	2.2	3		19	-	-	-	-	-	-	17.5	17	16.3	14.9	13.4	11.7	8	-
50-125/3	50-125/R	3	4		22	-	-	-	-	-	-	20.5	20	19.6	18.4	17	15.4	11.8	8
50-125/4	50-125	4	5.5		26.5	-	-	-	-	-	-	26	25.5	25	24	22.5	21.5	17.9	14
50-160/5.5	50-160/R	5.5	7.5		33	-	-	-	-	-	-	31	30.5	30	28.5	27	25.5	22	18
50-160/7.5	50-160	7.5	10		40	-	-	-	-	-	-	38.5	38	37.5	36	35	33.5	30	26
50-200/9.2	50-200/R	9.2	12.5		53	-	-	-	-	-	-	-	-	50	49	47.5	45.5	40.5	34
50-200/11	50-200	11	15		59	-	-	-	-	-	-	-	-	56	55	54	52	48	42
50-200/15	50-200/L	15	20		72	-	-	-	-	-	-	-	-	70	69	68	66	62	57

3 SERIES SF and PF version: 65, 80

Pump type		kW	HP	l/min	0	600	700	900	1300	1500	1700	1900	2100	2200	2300	2400	2500	3000	3400	3600	3800
3(.)SF	3(.) PF			m³/h	0	36	42	54	78	90	102	114	126	132	138	144	150	180	204	216	228
65-125/4	65-125/R	4	5.5		22	20	19	17	13.3	11	8,6	6.3	-	-	-	-	-	-	-	-	-
65-125/5.5	65-125	5.5	7.5		27	-	24	22	18	15.7	13.3	10.8	8	-	-	-	-	-	-	-	-
65-125/7.5	65-125/L	7.5	10		32	-	30	28	23.5	21.1	18.7	16.1	13.4	12	-	-	-	-	-	-	-
65-160/7.5	65-160/S	7.5	10		32	-	30	29	24.8	22.5	19.9	17.1	14.2	-	-	-	-	-	-	-	-
65-160/9.2	65-160/R	9.2	13		37	-	35	33	28.8	26.5	23.9	21.1	18.3	16.8	-	-	-	-	-	-	-
65-160/11	65-160	11	15		41	-	39	37	33.1	30.9	28.4	25.8	23	21.5	20	-	-	-	-	-	-
65-160/15	65-160/L	15	20		48	-	46	44	40	37.8	35.3	32.6	29.6	28	26.5	-	-	-	-	-	-
65-200/15	65-200/R	15	20		54	-	51	49	44	41.5	38.4	35.3	31.8	30	-	-	-	-	-	-	-
65-200/18.5	65-200	19	25		61	-	59	57	51.5	49	46	43	39.7	38	36.3	-	-	-	-	-	-
65-200/22	65-200/L	22	30		67	-	66	64	59.5	57	54	51	48	46.5	45	-	-	-	-	-	-
65-250/30	65-250	30	40		78	-	-	77	73.5	71	68	64.5	60	57.5	55	52	-	-	-	-	-
65-250/37	65-250/L	37	50		89	-	-	88	85.5	83	80.5	77.5	74	72	70	67.5	65	-	-	-	-
80-160/11	80-160/S	11	15		29	-	-	-	27.3	26.4	25.4	24.2	23	22.4	21.8	21.1	20.4	16.4	12.5	-	-
80-160/15R	80-160/R	15	20		32	-	-	-	30.5	29.7	28.8	27.7	26.5	25.9	25.3	24.6	24	20.1	16.5	14.5	-
80-160/15	80-160	15	20		35	-	-	-	34	33.3	32.5	31.5	30.5	30	29.4	28.8	28.1	24.4	21	19.1	17
80-160/18.5	80-160/L	19	25		40	-	-	-	39	38.4	37.6	36.7	35.7	35.2	34.7	34.1	33.5	30	26.4	24.4	22.3
80-200/22	80-200/R	22	30		50	-	-	-	48	47	45.5	44.5	43	42	41	40	39	33.2	27.8	25	-
80-200/30	80-200	30	40		60	-	-	-	58.5	58	57	56	54.5	54	53	52	51	46.5	41.5	39	36.1
80-200/37	80-200/L	37	50		66	-	-	-	64	63	62	61	59.5	59	58	57.5	56.5	51.5	47	44.5	41.5
80-250/37	80-250/R	37	50		73	-	-	-	71.5	70.5	68.5	66.5	64	63	61.5	60	58.5	48.5	38	-	-
80-250/45	80-250	45	60		84	-	-	-	82.5	81.5	80	78	76	75	73.5	72.5	71	62	53	48	42.5
80-250/55	80-250/L	55	75		95	-	-	-	93.5	92.5	91.5	90	88.5	87.5	86.5	85.5	84	76.5	68.5	64.5	60

PERFORMANCE CURVE

50Hz

Rev. H

PERFORMANCE RANGE

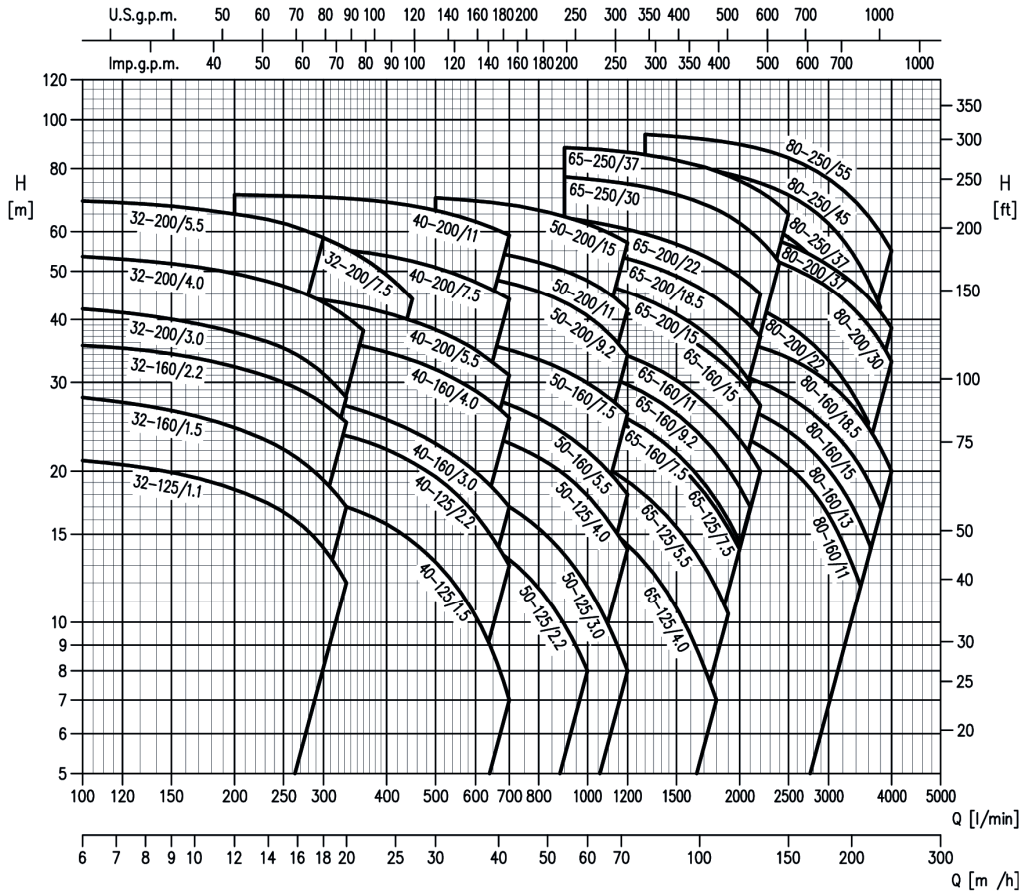

PERFORMANCE CURVE SPECIFICATIONS

The specifications below qualify the curves shown on the following pages.

Tolerances according to ISO 9906:2012 - Grade 3B
The curves refer to effective speed of asynchronous motors at 50 Hz, 2 poles.
Measurements were carried out with clean water at 20℃ of temperature and with a kinematic viscosity o f Q = 1 mm^2/s (1 cSt)
The NPSH curve is an average curve obtained in the same conditions of performance curves. During the pump selection, consider to get a safety margin of at least 1 m.
The continuos curves indicate the recommended working range. The dotted curve is only a guide.
In order to avoid the risk of over-heating, the pumps should not be used at a flow rate below 10% of best efficiency point.

Symbols explanation:

Q = volume flow rate
H = total head
P_2 = pump power input (shaft power)
K = pump efficiency
NPSH = net positive suction head required by the pump

PERFORMANCE CURVE

50Hz

Rev. H

3(.)SF 32-125/1.1 and **3(.)PF 32-125** (1.1kW) – impeller diameter = 133 mm

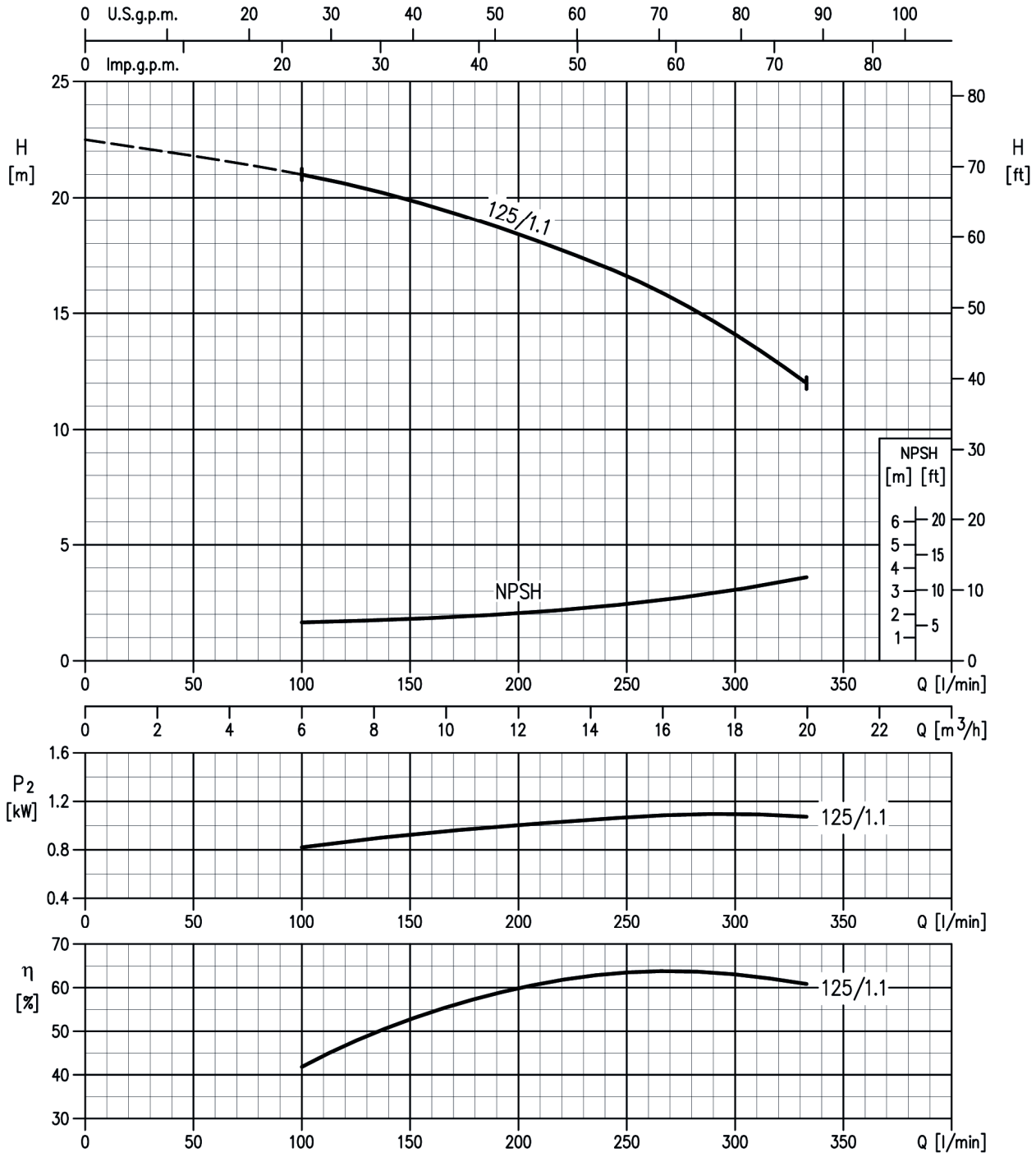

Rotation speed ≈2900 min-1
Test standard: ISO 9906:2012 - Grade 3B

PERFORMANCE CURVE

50Hz

Rev. H

3(.)SF 32-160/1.5 and **3(.)PF 32-160/R** (1.5kW) – impeller diameter = 151 mm
3(.)SF 32-160/2.2 and **3(.)PF 32-160** (2.2kW) – impeller diameter = 166 mm

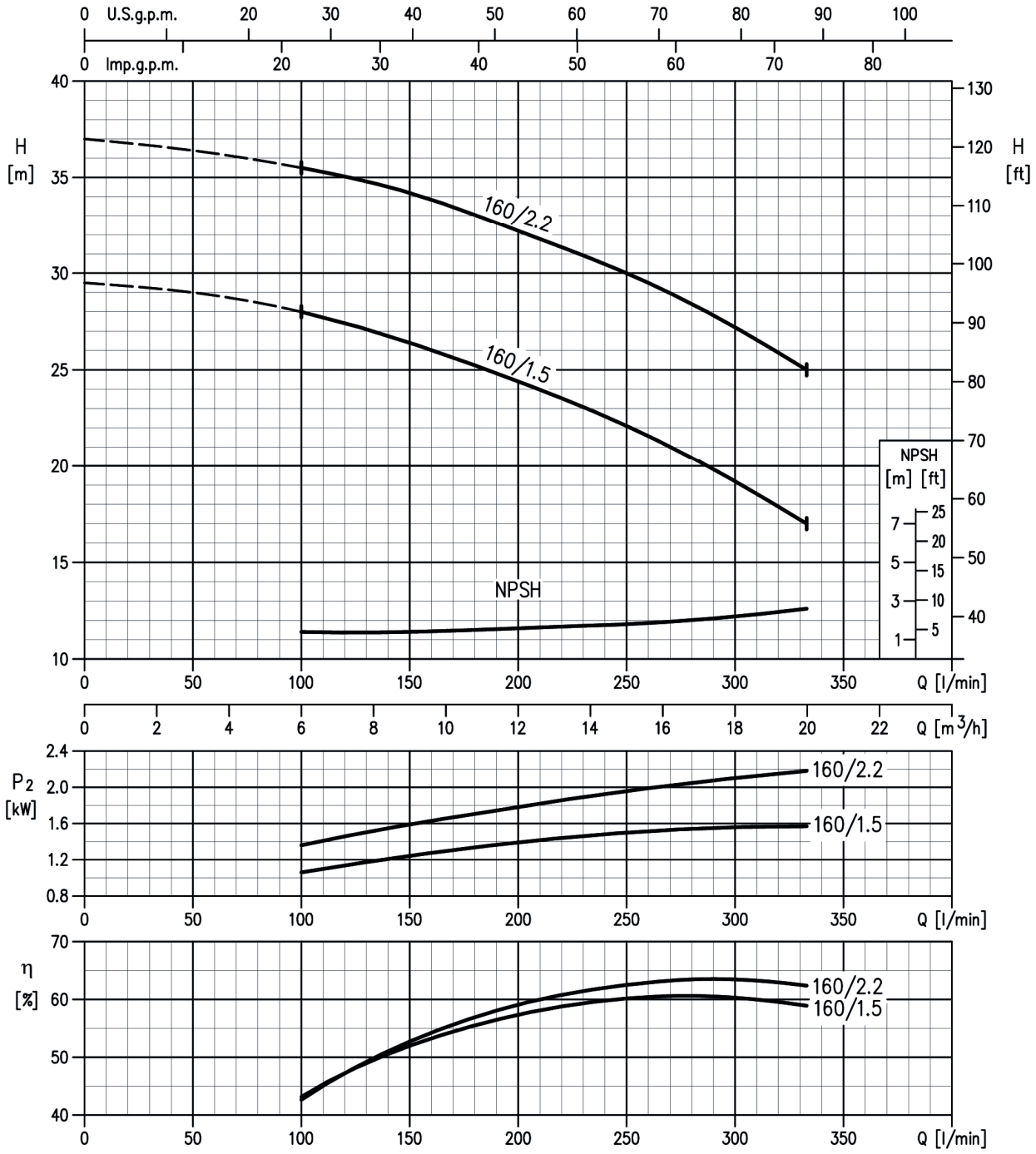

Rotation speed ≈2900 min-1
Test standard: ISO 9906:2012 - Grade 3B

PERFORMANCE CURVE

50Hz

Rev. H

3(.)SF 32-200/3 and **3(.)PF 32-200/R** (3.0kW) – impeller diameter = 186 mm
3(.)SF 32-200/4 and **3(.)PF 32-200** (4.0kW) – impeller diameter = 200 mm
3(.)SF 32-200/5.5 and **3(.)PF 32-200/L** (5.5kW) – impeller diameter = 224 mm
3(.)SF 32-200/7.5 and **3(.)PF 32-200/L** (7.5kW) – impeller diameter = 224 mm

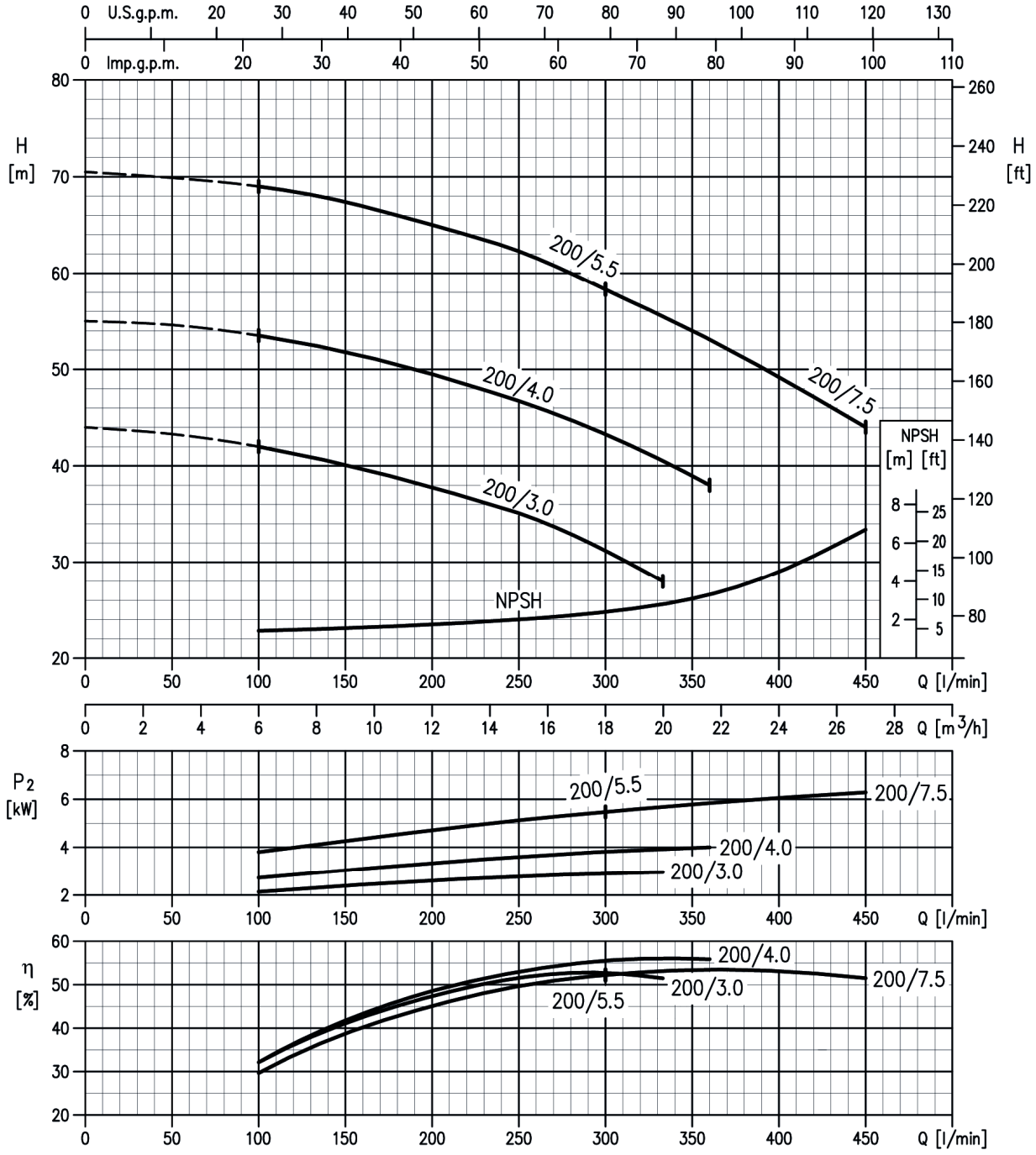

Rotation speed ≈2900 min-1
Test standard: ISO 9906:2012 - Grade 3B

PERFORMANCE CURVE

50Hz

Rev. H

3(.)SF 40-125/1.5 and **3(.)PF 40-125/R** (1.5kW) – impeller diameter = 125 mm
3(.)SF 40-125/2.2 and **3(.)PF 40-125** (2.2kW) – impeller diameter = 140 mm

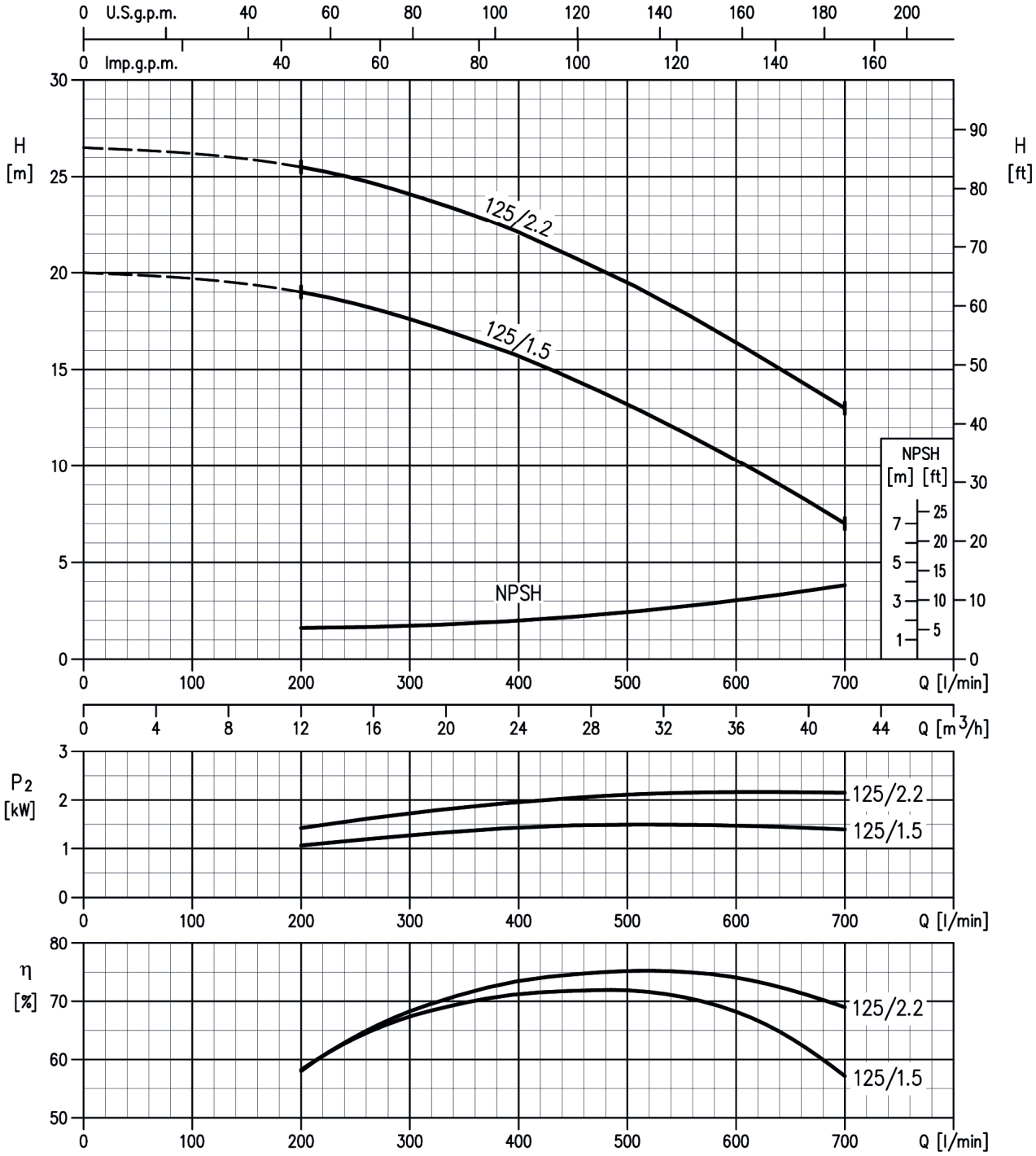

Rotation speed ≈2900 min-1
Test standard: ISO 9906:2012 - Grade 3B

PERFORMANCE CURVE

50Hz

Rev. H

3(.)SF 40-160/3 and **3(.)PF 40-160/R** (3.0kW) – impeller diameter = 151 mm
3(.)SF 40-160/4 and **3(.)PF 40-160** (4.0kW) – impeller diameter = 166 mm

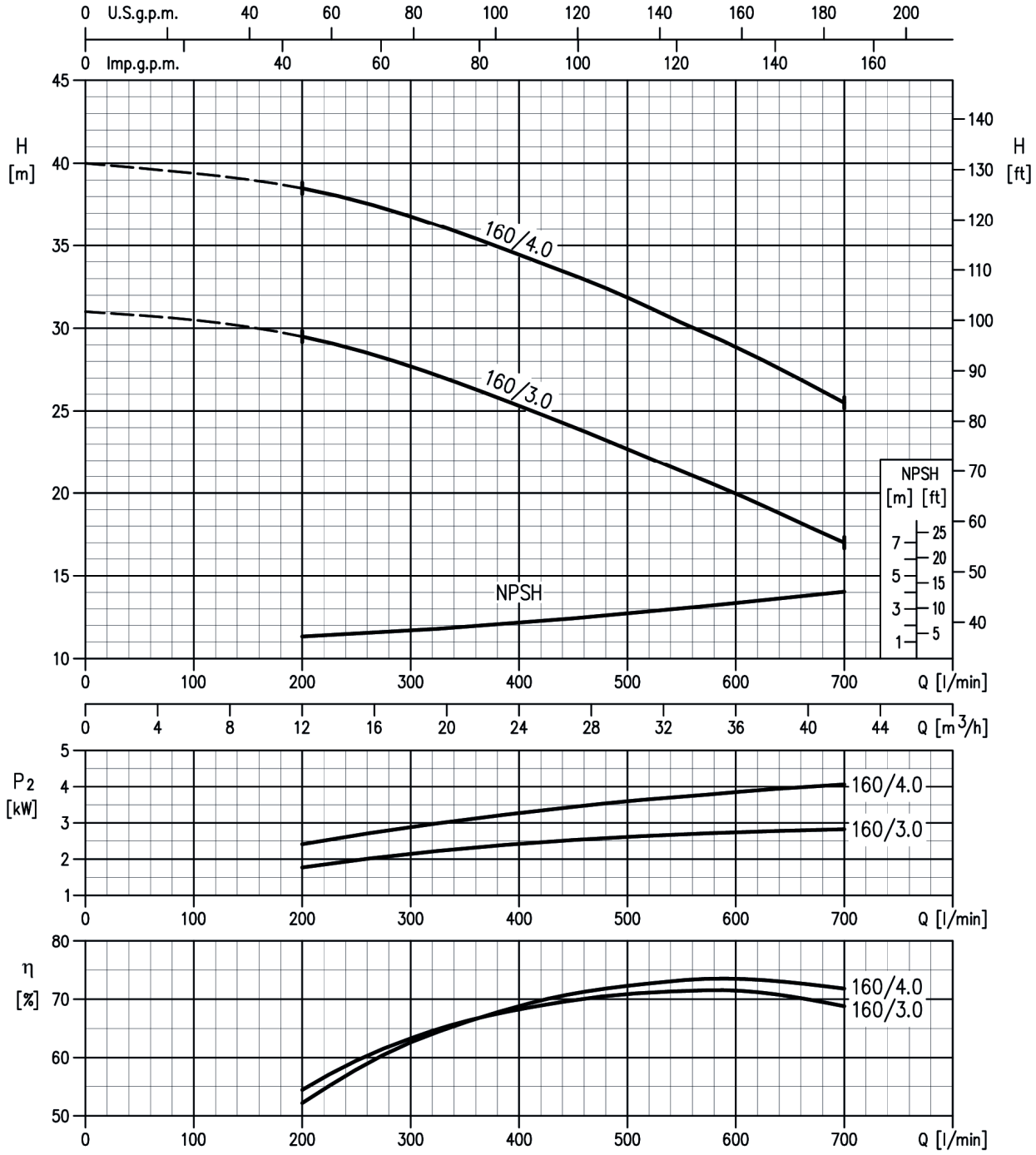

Rotation speed ≈2900 min-1
Test standard: ISO 9906:2012 - Grade 3B

PERFORMANCE CURVE

50Hz

Rev. H

3(.)SF 40-200/5.5 and **3(.)PF 40-200/R** (5.5kW) – impeller diameter = 183 mm
3(.)SF 40-200/7.5 and **3(.)PF 40-200** (7.5kW) – impeller diameter = 200 mm
3(.)SF 40-200/11 and **3(.)PF 40-200/L** (11kW) – impeller diameter = 224 mm

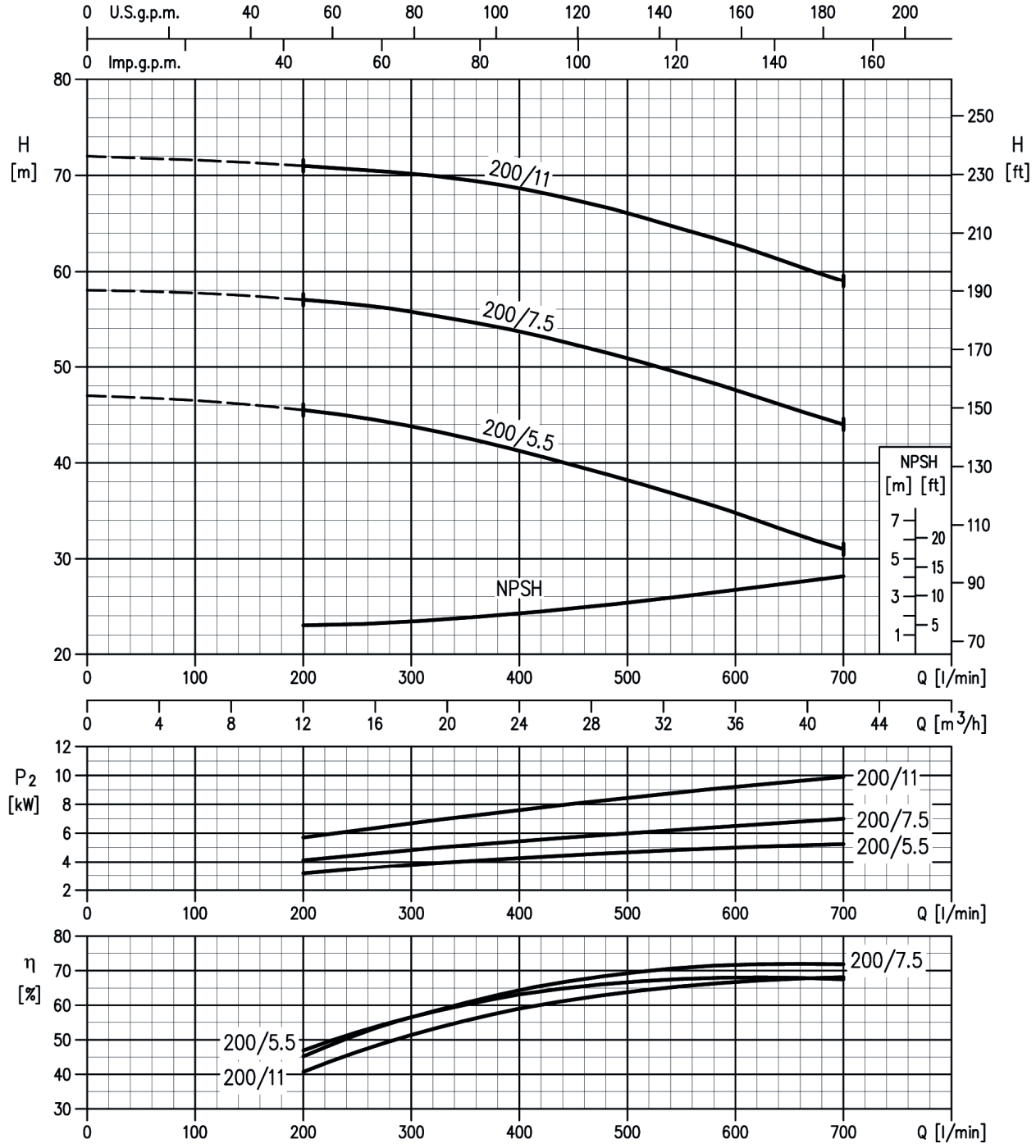

Rotation speed ≈2900 min-1
Test standard: ISO 9906:2012 - Grade 3B

PERFORMANCE CURVE

50Hz

Rev. H

3(.)SF 50-125/2.23(.)PF 50-125/S (2.2kW) – impeller diameter = 126 mm
3(.)SF 50-125/3 and **3(.)PF 50-125/R** (3.0kW) – impeller diameter = 131 mm
3(.)SF 50-125/4 and **3(.)PF 50-125** (4.0kW) – impeller diameter = 140 mm

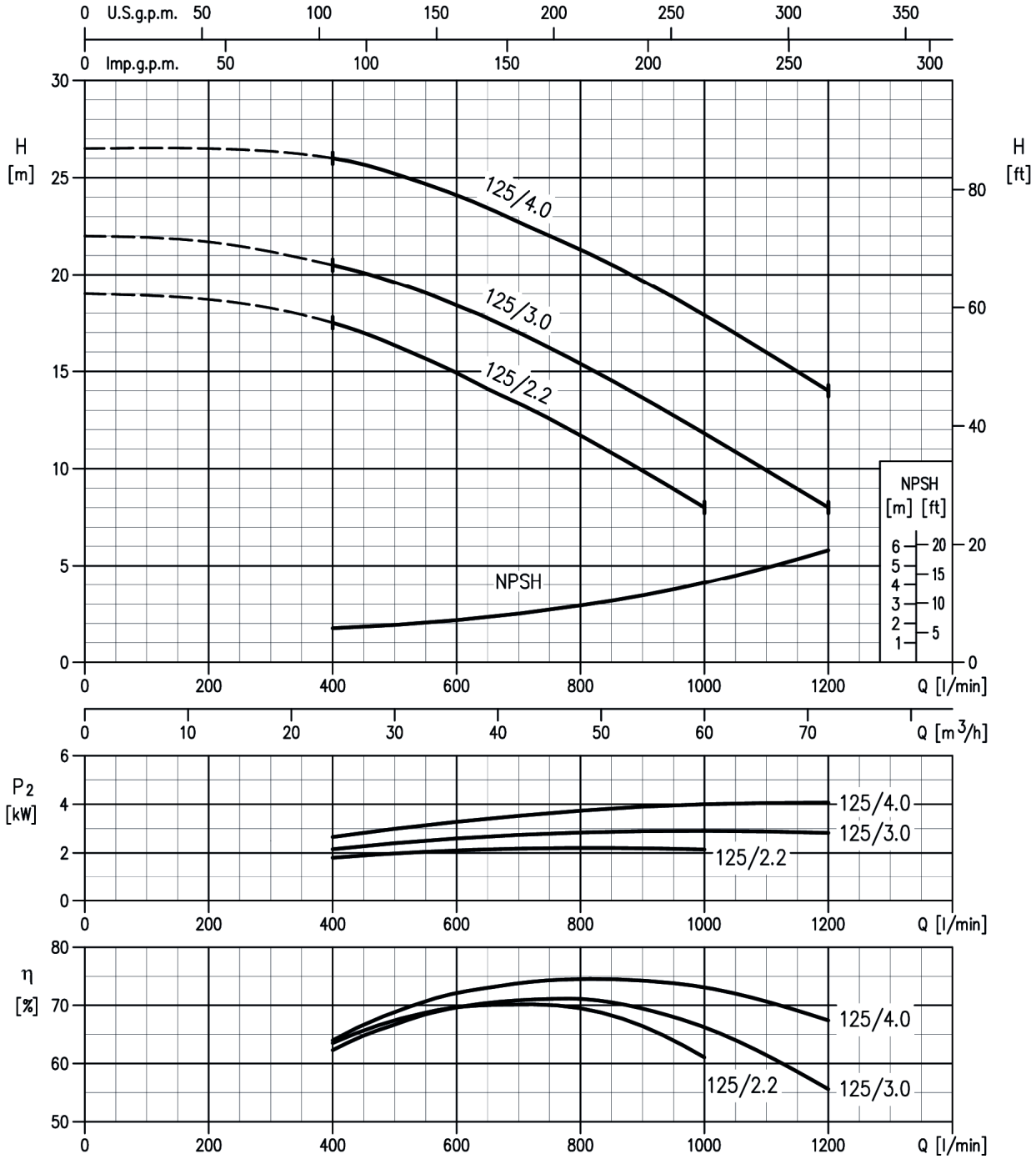

Rotation speed ≈2900 min-1
Test standard: ISO 9906:2012 - Grade 3B

PERFORMANCE CURVE

50Hz

Rev. H

3(.)SF 50-160/5.5 and **3(.)PF 50-160/R** (5.5kW) – impeller diameter = 154 mm
3(.)SF 50-160/7.5 and **3(.)PF 50-160** (7.5kW) – impeller diameter = 166 mm

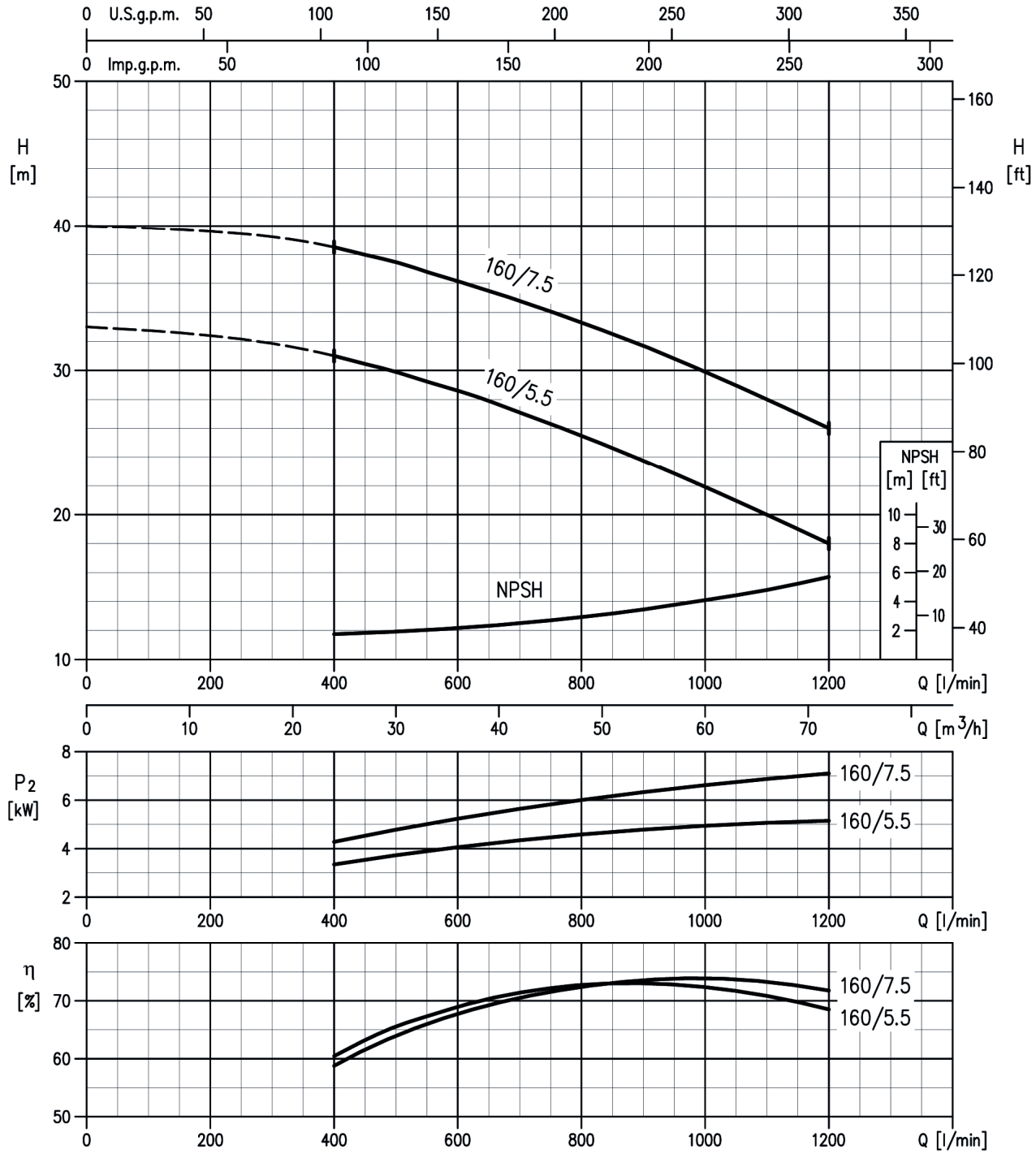

Rotation speed ≈2900 min-1
Test standard: ISO 9906:2012 - Grade 3B

PERFORMANCE CURVE

50Hz

Rev. H

3(.)SF 50-200/9.23(.)PF 50-200/R (9.2kW) – impeller diameter = 191 mm
3(.)SF 50-200/11 and **3(.)PF 50-200** (11kW) – impeller diameter = 200 mm
3(.)SF 50-200/15 and **3(.)PF 50-200/L** (15kW) – impeller diameter = 224 mm

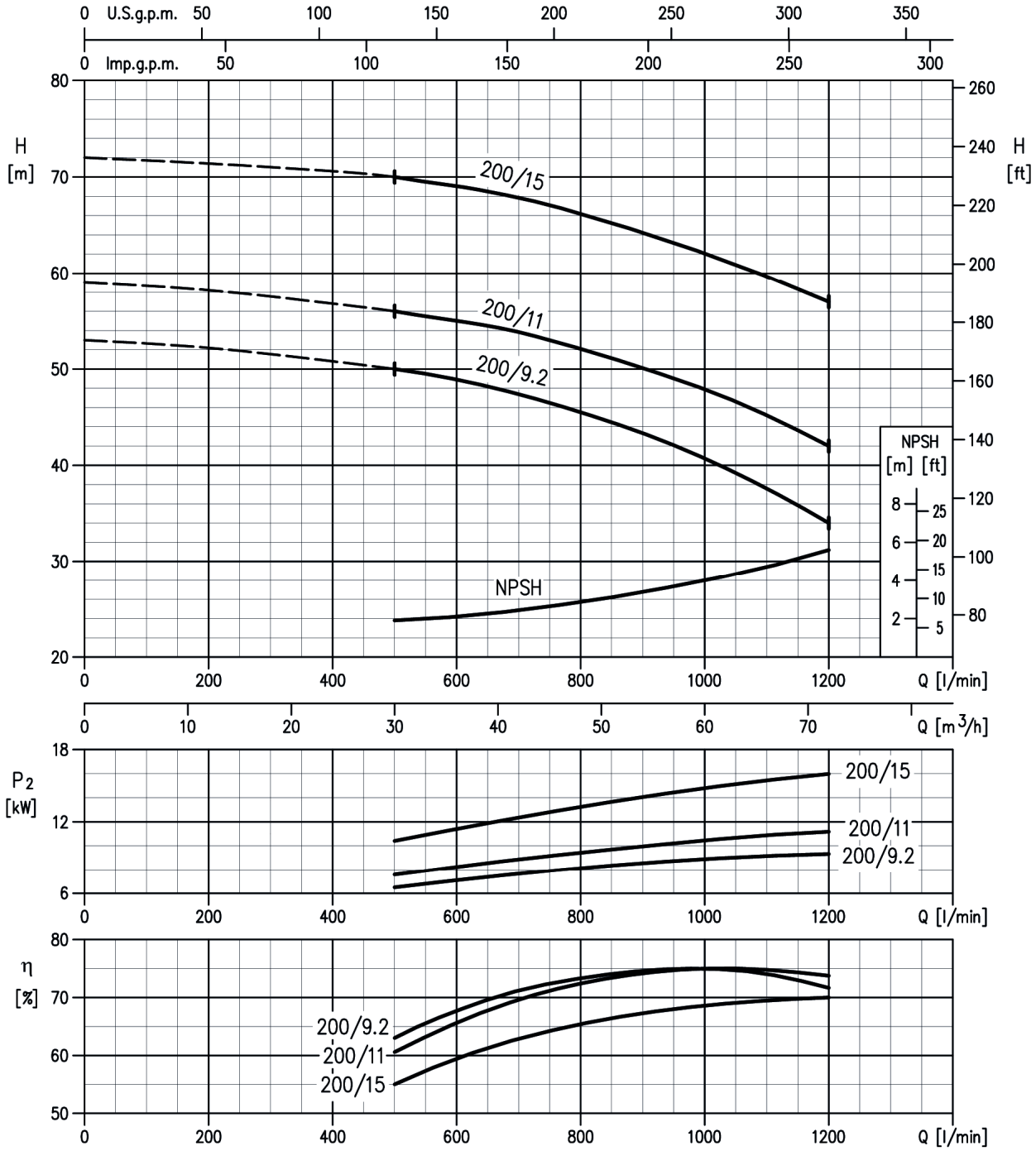

Rotation speed ≈2900 min-1
Test standard: ISO 9906:2012 - Grade 3B

PERFORMANCE CURVE

50Hz

Rev. H

3(.)SF 65-125/4 and **3(.)PF 65-125/R** (4.0kW) – impeller diameter = 128 mm
3(.)SF 65-125/5.5 and **3(.)PF 65-125** (5.5kW) – impeller diameter = 138 mm
3(.)SF 65-125/7.5 and **3(.)PF 65-125/L** (7.5kW) – impeller diameter = 149 mm

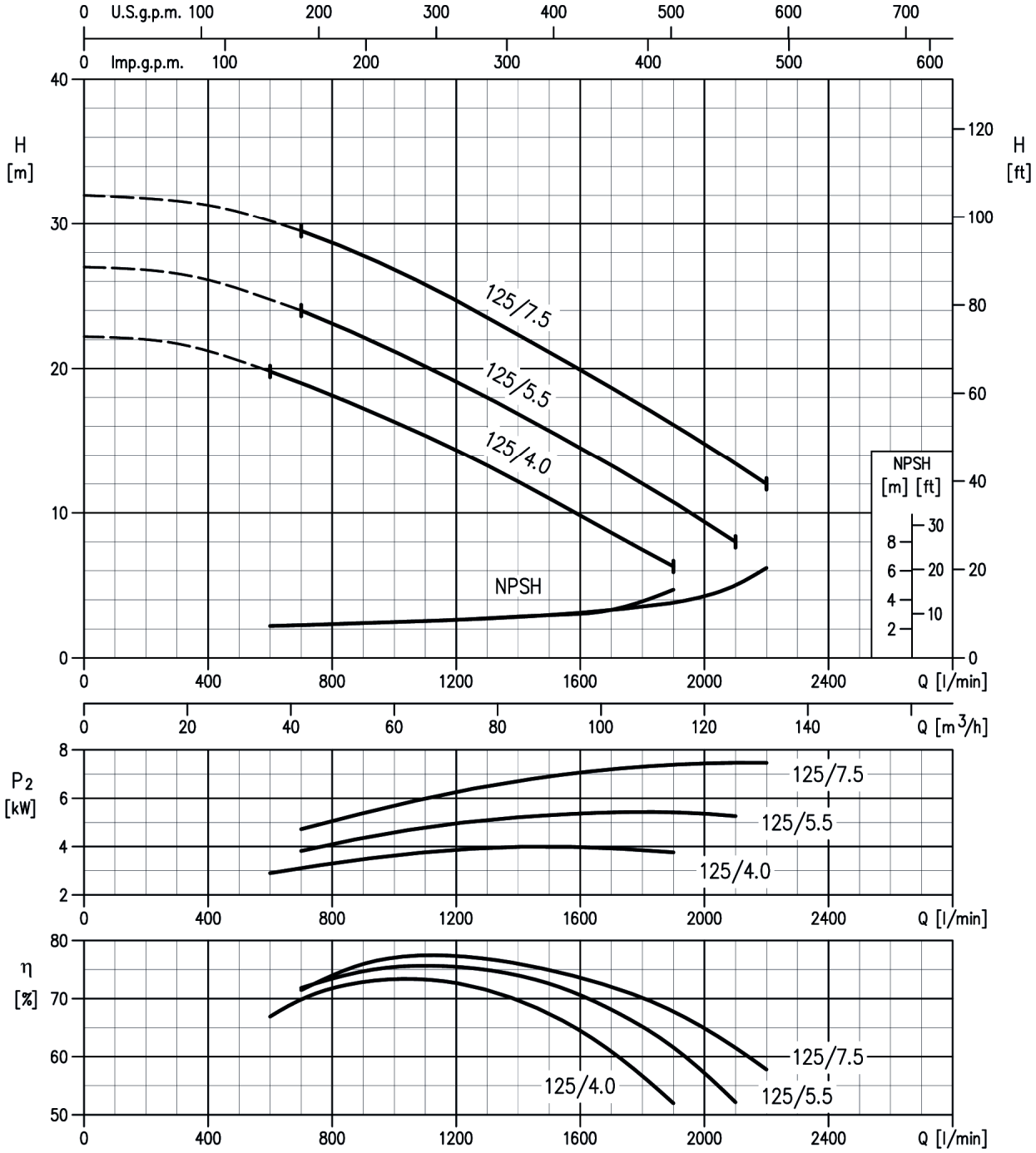

Rotation speed ≈2900 min-1
Test standard: ISO 9906:2012 - Grade 3B

PERFORMANCE CURVE

50Hz

Rev. H

3(.)SF 65-160/7.5 and **3(.)PF 65-160/S** (7.5kW) – impeller diameter = 153 mm
3(.)SF 65-160/9.2 and **3(.)PF 65-160/R** (9.2kW) – impeller diameter = 161 mm
3(.)SF 65-160/11 and **3(.)PF 65-160** (11kW) – impeller diameter = 168 mm
3(.)SF 65-160/15 and **3(.)PF 65-160/L** (15kW) – impeller diameter = 178 mm

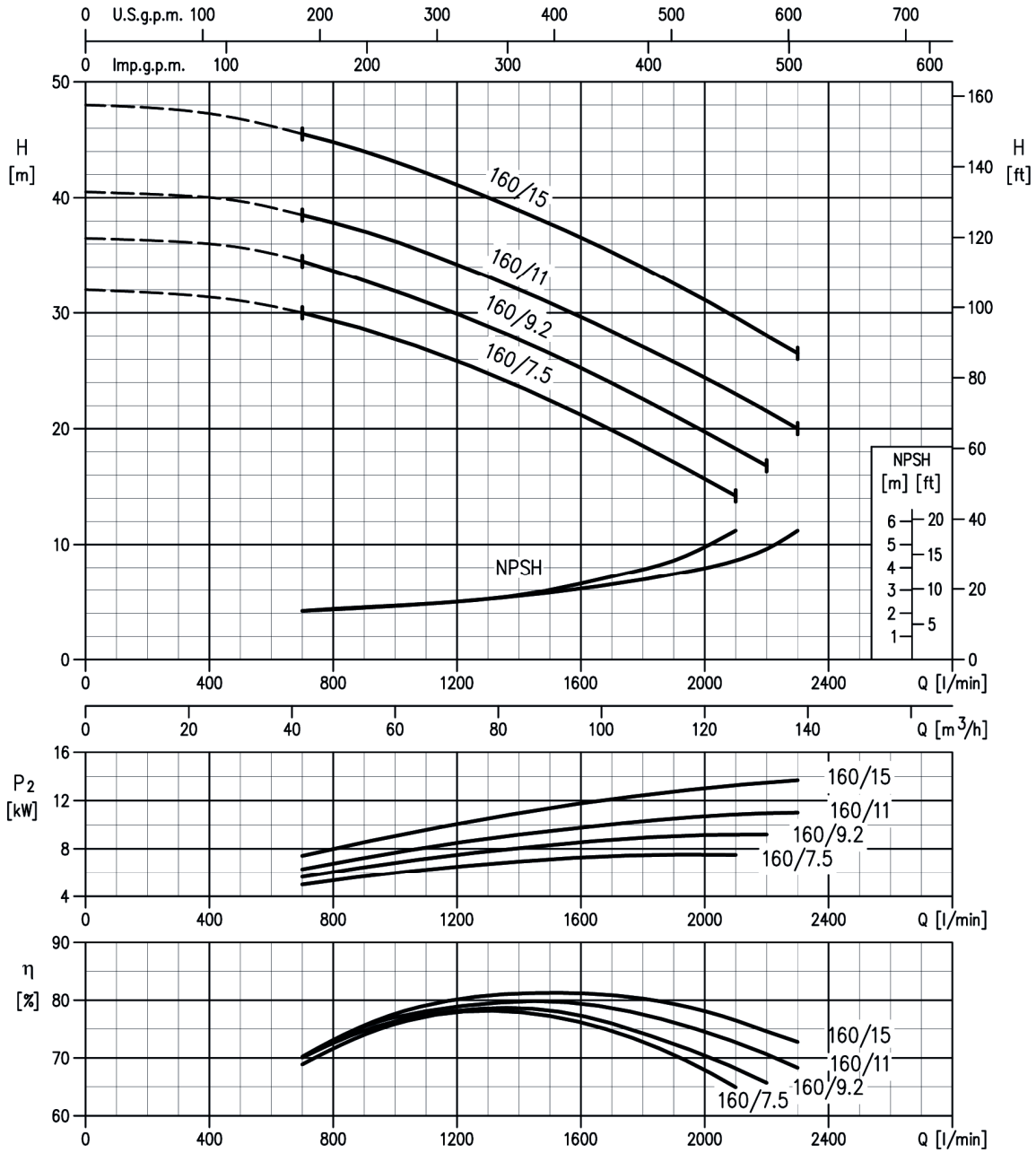

Rotation speed ≈2900 min-1
Test standard: ISO 9906:2012 - Grade 3B

PERFORMANCE CURVE

50Hz

Rev. H

3(.)SF 65-200/15 and **3(.)PF 65-200/R** (15kW) – impeller diameter = 190 mm
3(.)SF 65-200/18.5 and **3(.)PF 65-200** (18.5kW) – impeller diameter = 201 mm
3(.)SF 65-200/22 and **3(.)PF 65-200/L** (22kW) – impeller diameter = 212 mm

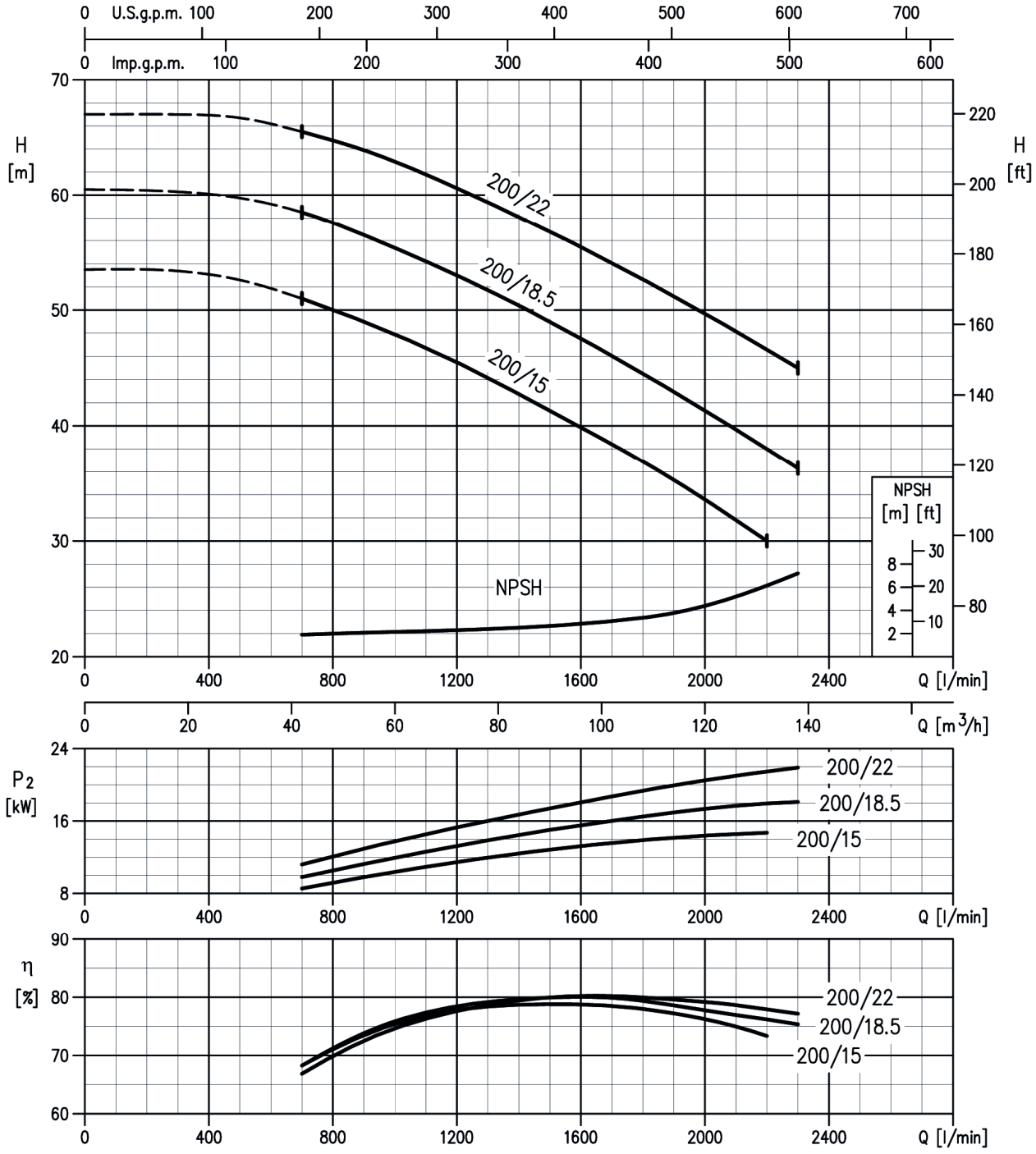

Rotation speed ≈2900 min-1
Test standard: ISO 9906:2012 - Grade 3B

PERFORMANCE CURVE

50Hz

Rev. H

3LSF 65-250/30 and **3LPF 65-250** (30kW) – impeller diameter = 235 mm
3LSF 65-250/37 and **3LPF 65-250/L** (37kW) – impeller diameter = 250 mm

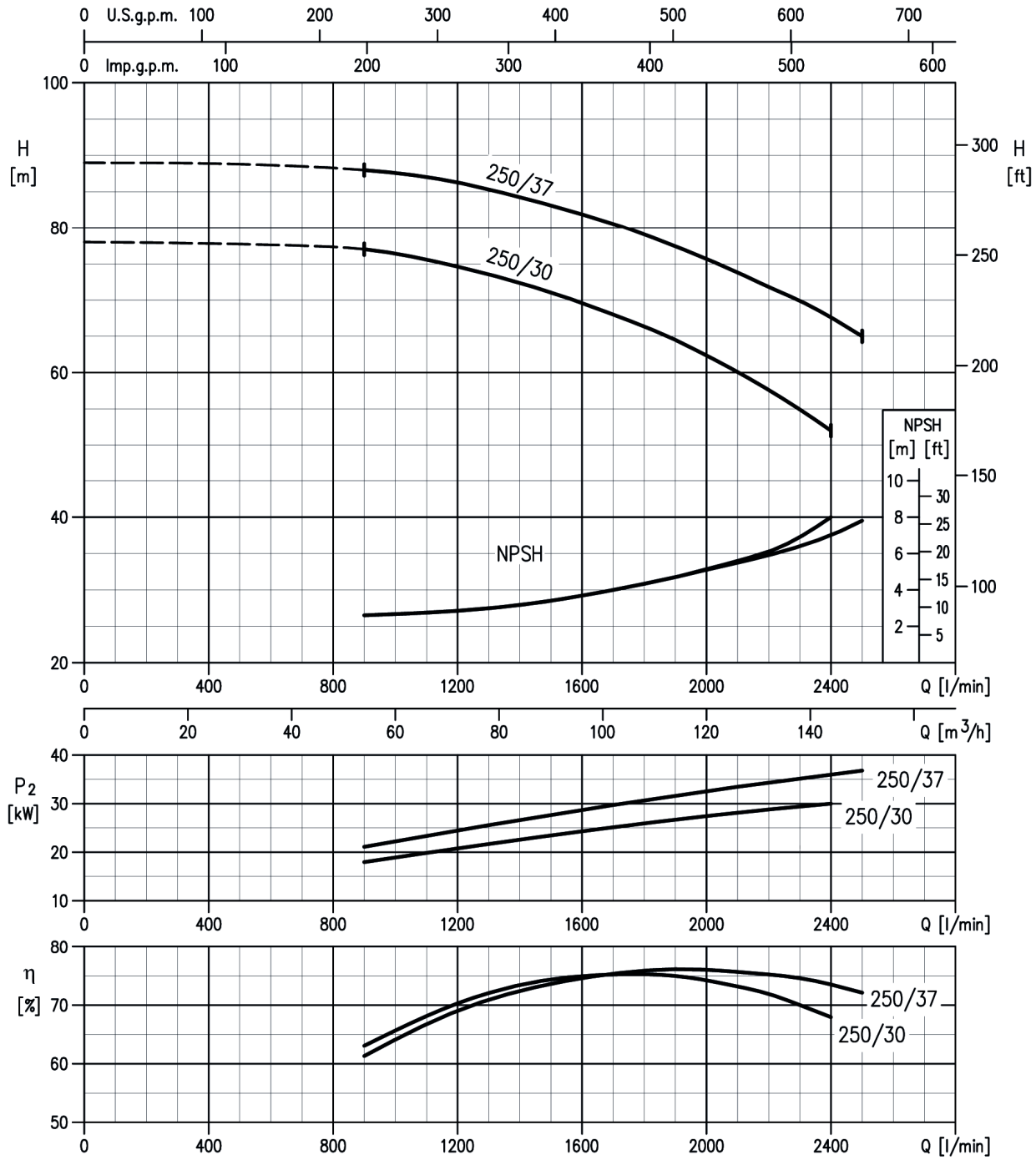

Rotation speed ≈2900 min-1
Test standard: ISO 9906:2012 - Grade 3B

PERFORMANCE CURVE

50Hz

Rev. H

3LSF 80-160/11 and **3LPF 80-160/S** (11kW) – impeller diameter = 154 mm
3LSF 80-160/15R and **3LPF 80-160/R** (15kW) – impeller diameter = 160 mm
3LSF 80-160/15 and **3LPF 80-160** (15kW) – impeller diameter = 165 mm
3LSF 80-160/18.5 and **3LPF 80-160/L** (18.5kW) – impeller diameter = 174 mm

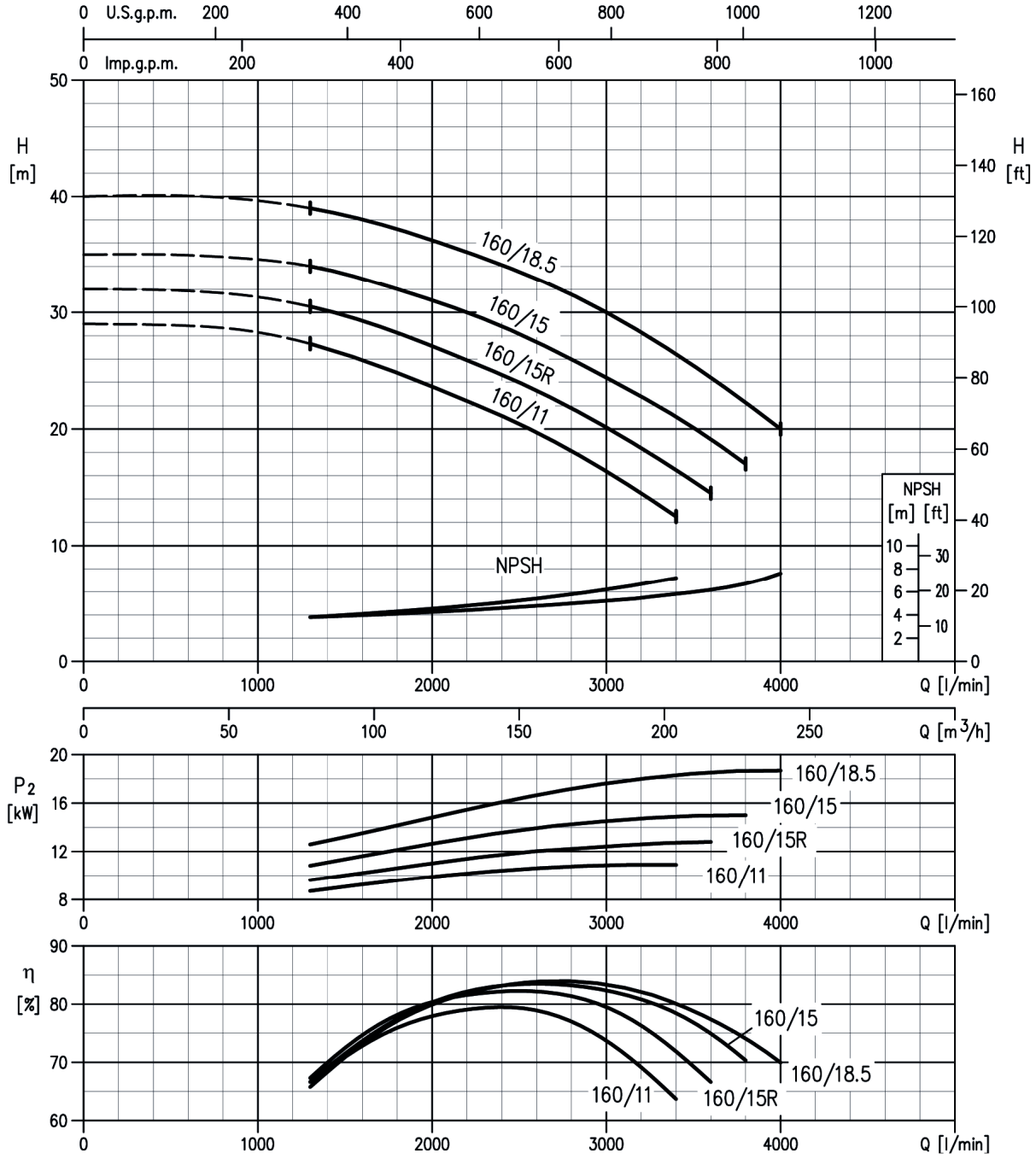

Rotation speed ≈2900 min-1
Test standard: ISO 9906:2012 - Grade 3B

PERFORMANCE CURVE

50Hz

Rev. H

3LSF 80-200/22 and **3LPF 80-200/R** (22kW) – impeller diameter = 196 mm
3LSF 80-200/30 and **3LPF 80-200** (30kW) – impeller diameter = 211 mm
3LSF 80-200/37 and **3LPF 80-200/L** (37kW) – impeller diameter = 219 mm

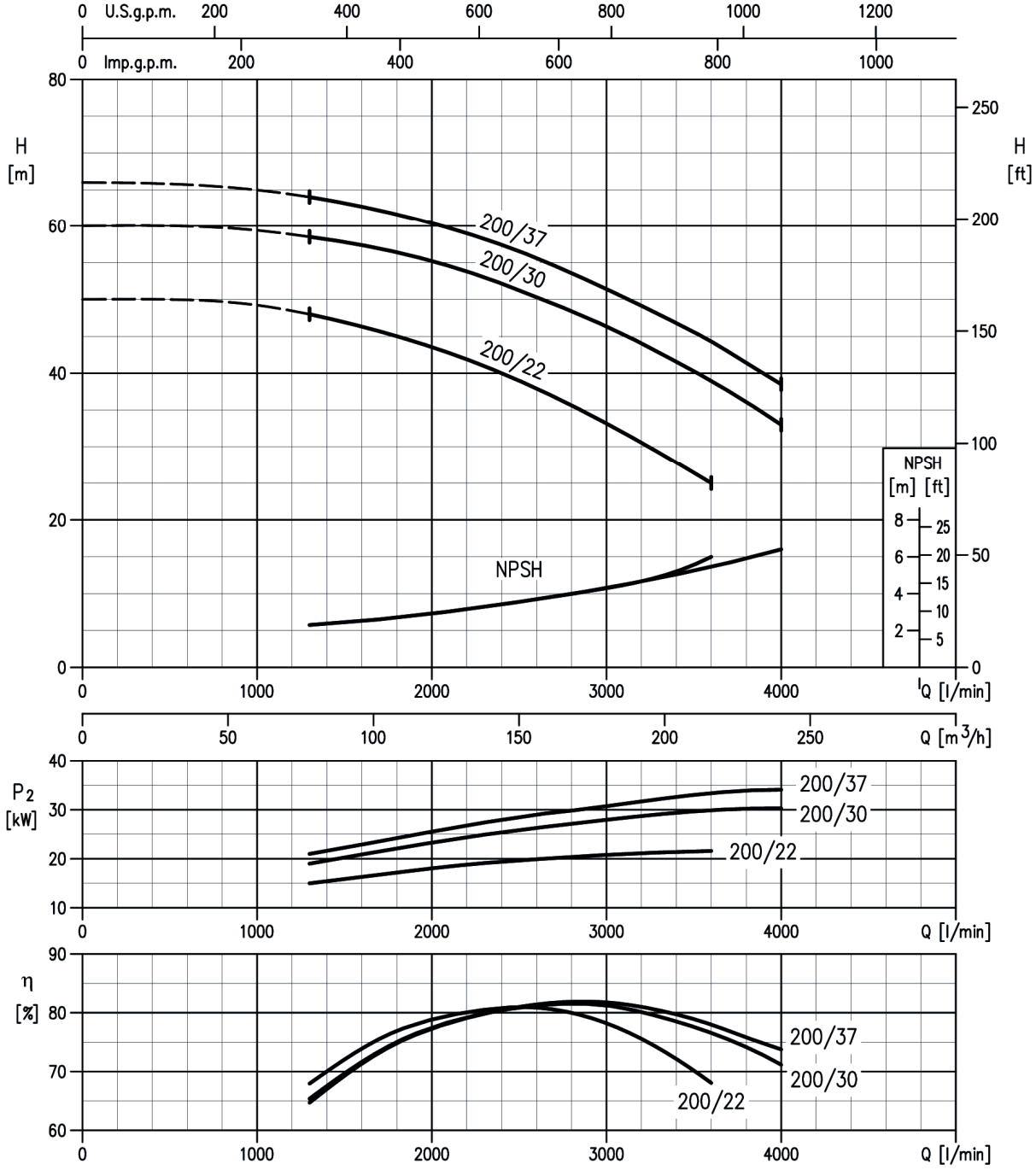

Rotation speed ≈2900 min-1
Test standard: ISO 9906:2012 - Grade 3B

PERFORMANCE CURVE

50Hz

Rev. H

3LSF 80-250/37 and **3LPF 80-250/R** (37kW) – impeller diameter = 230 mm
3LSF 80-250/45 and **3LPF 80-250** (45kW) – impeller diameter = 245 mm
3LSF 80-250/55 and **3LPF 80-250/L** (55kW) – impeller diameter = 259 mm

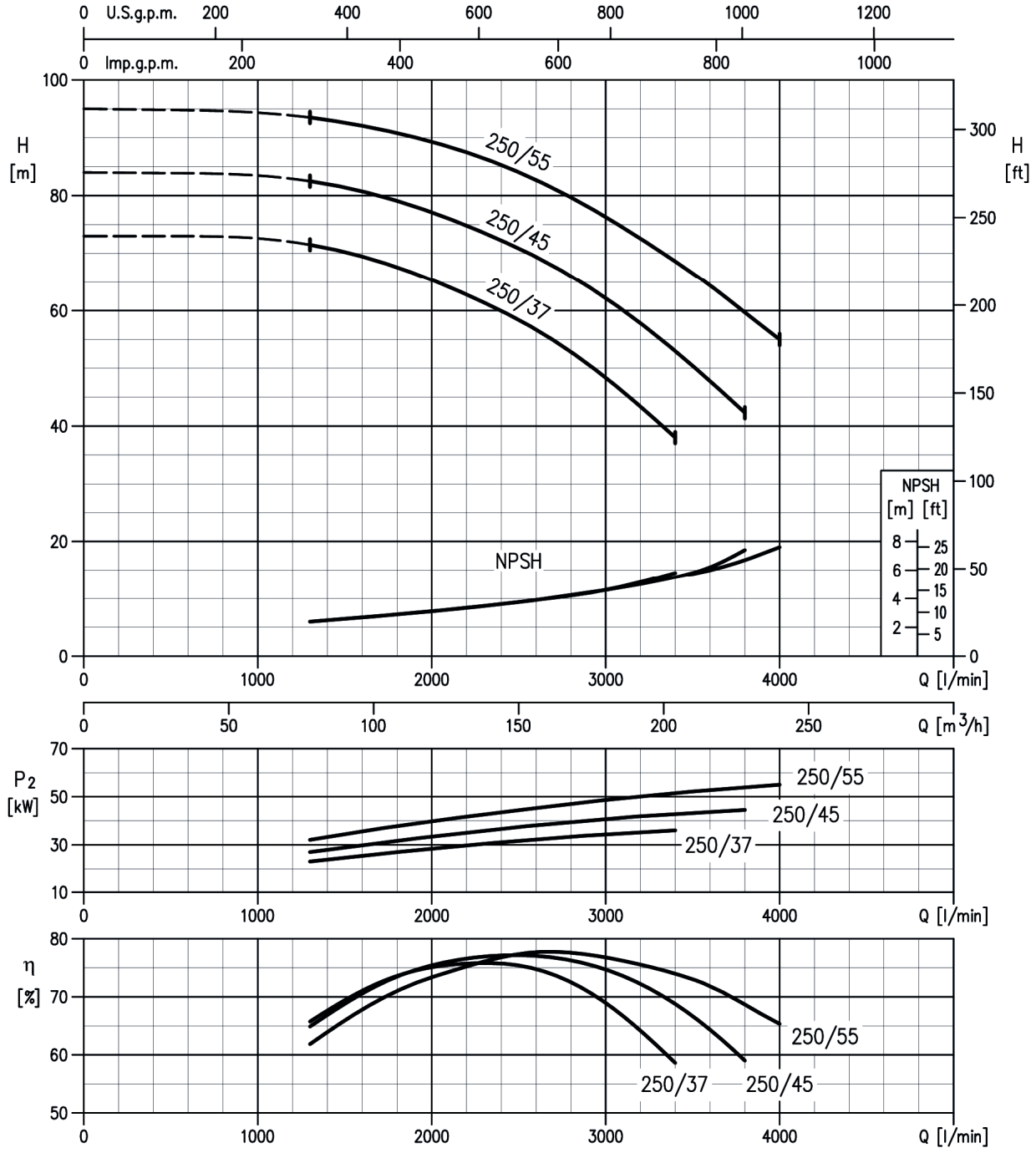

Rotation speed ≈2900 min-1
Test standard: ISO 9906:2012 - Grade 3B

CONSTRUCTION

50Hz

Rev. H

SECTIONAL VIEW DRAWING
3(.)SF 32, 40, 50, 65

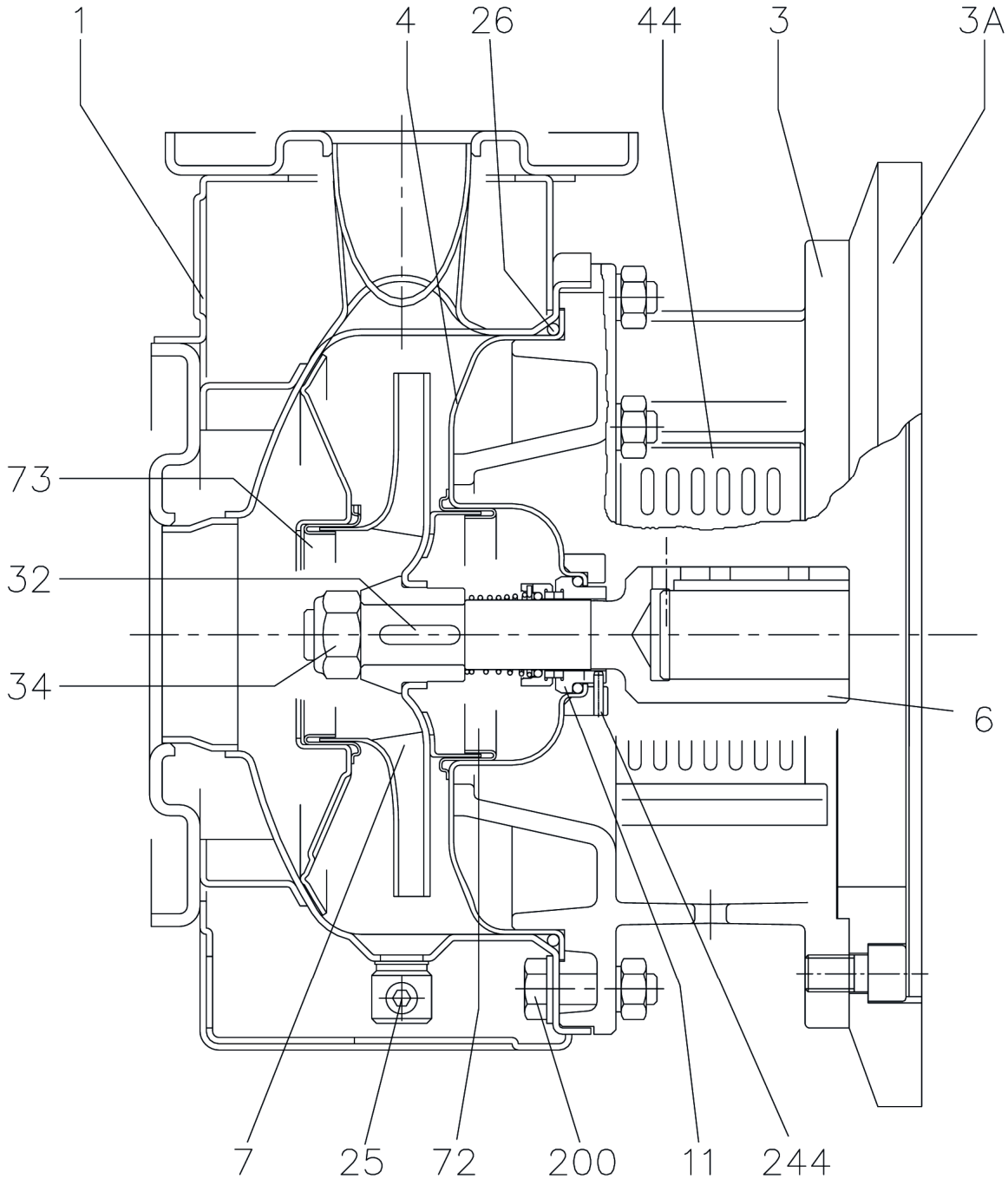

CONSTRUCTION

50Hz

Rev. H

SECTIONAL VIEW TABLE
3(.)SF 32, 40, 50, 65

N°	PART NAME		MATERIAL 3SF	MATERIAL 3LSF	DIMENSIONS	STANDARD	Q.TY
1	Casing		EN 1.4301 (AISI 304)	EN 1.4404 (AISI 316L)			1
3	Motor bracket		Cast iron EN-G JL-200-EN 1561				1
3A	Adapter ring	[1]	Cast iron EN-G JL-200-EN 1561				1
4	Casing cover		EN 1.4301 (AISI 304)	EN 1.4404 (AISI 316L)			1
6	Coupling - Part in contact with liquid		EN 1.4301 (AISI 304)	EN 1.4404 (AISI 316L)	See table p. 318		1
7	Impeller	32,40,50	EN 1.4301 (AISI 304)	EN 1.4404 (AISI 316L)			1
		65-125/160/200	EN 1.4401 (AISI 316)				
11	Mechanical seal		Carbon/Ceramic/NBR	SiC/SiC/FPM	See p. 313-317		1
25	Draing plug		EN 1.4401 (AI SI 316) / PTFE		R 1/8" L=8	DIN 906	1
26	"O" ring	32-125, 40-125	NBR [5]	FPM	158.11x5.34	OR 6625	1
		32-160, 40-160 , 50-125, 65-125			183.52x5.34	OR 6720	
		32-200, 40-200, 50-160, 50-200, 65-160, 65-200			227.96x5.34	OR 6895	
32	Key	Up to 11 kW	EN 1.4301 (AISI 304)	EN 1.4401 (AISI 316)	6x6x25	UNI 6604	1
		15 kW and above			8 x7x 30		
34	Impeller nut	Up to 11kW	EN 1.4301 (AISI 304)	EN 1.4404 (AISI 316L)	M16x1.5	UNI 7474	1
		50-200/15			M18x1.5		
		15 kW and above			M20x1.5		
44	Protection		EN 1.4301 (AISI 304)			EBARA DRAWING	1
72	Casing ring	[2]	EN 1.4301 (AISI 304)	EN 1.4404 (AISI 316L)			1
73	Casing ring (not for 65 version)		EN 1.4301 (AISI 304)	EN 1.4404 (AISI 316L)			1
200	Screw	32-125, 40-125	Stainless steel A2 70 class ISO 3506/ 1		M 8x30	UNI 5739	8
		40-160, 40-200, 50-125, 50-160, 50-200, 65-125, 65-160, 65-200			M 10x35	UNI 5739	[3]
244	Pin	[4]	/	EN 1.4301 (AISI 304)	4x15		1

Counterflange kit on request, see table p.319-320

[1] Only for 65-125/5.5 and 65-125/7.5
[2] For version 32-200, 40-200, 50-160, 50-200
[3] N° for 1 unit=10 for 32-160, 40-160, 50-125, 65-125
N° for 1 unit=12 for 32-200, 40-200, 50-160, 50-200, 65-160, 65-200
[4] Only for 65-160/15 and 65-200
[5] FPM for H-HS-HW-HSW version
EPDM for E version, Q1AEGG, Q1U3EGG, U3CEGG, Q1Q1EGG, U3U3EGG
U3U3EGG not available for models 65-160/15 and 65-200

.

CONSTRUCTION

50Hz

Rev. H

SECTIONAL VIEW DRAWING
3LSF 80-160

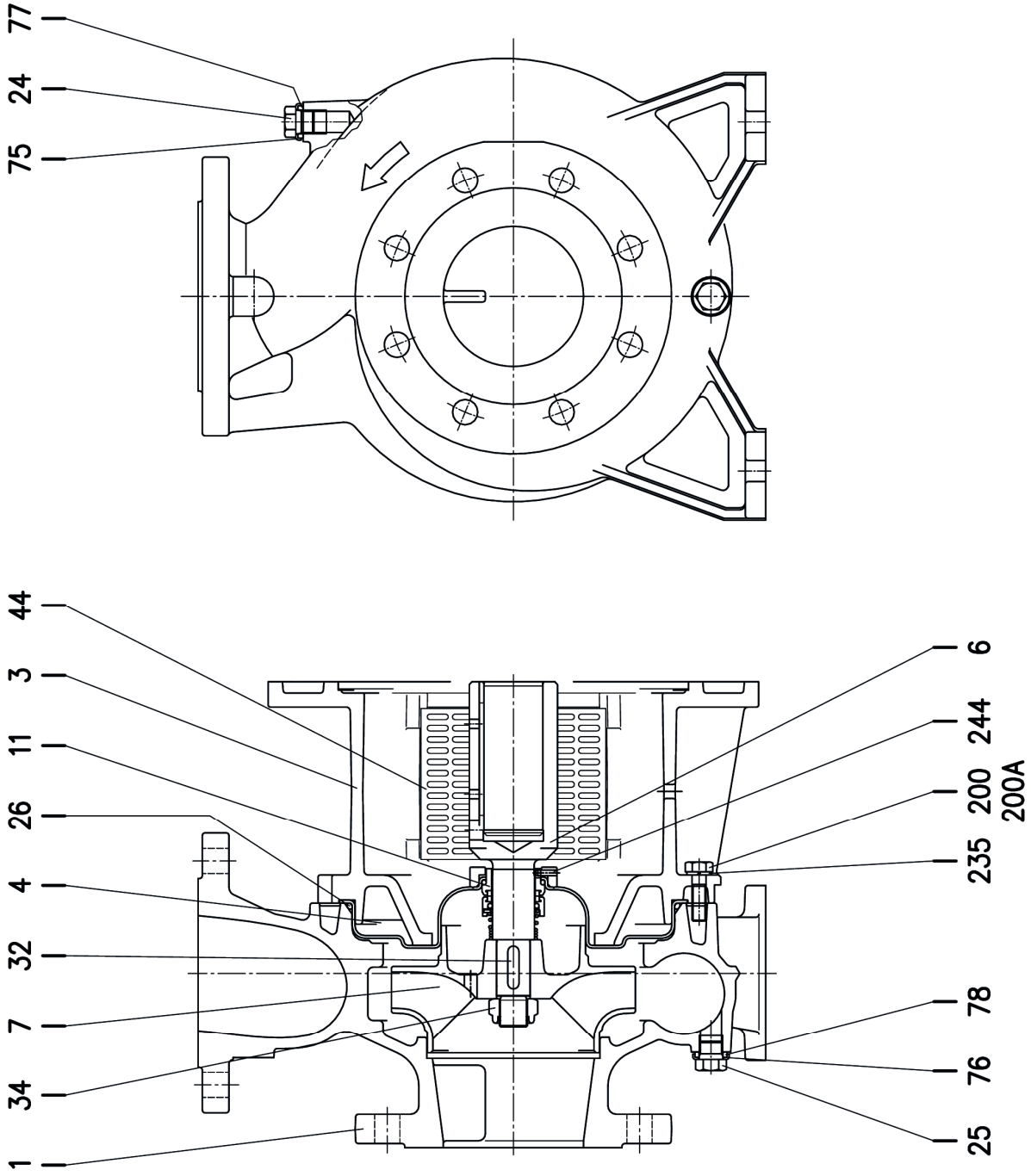

SECTIONAL VIEW TABLE
3LSF 80-160

N°	PART NAME	MATERIAL	DIMENSIONS	STANDARD	Q.TY
1	Casing	EN 1.4401 (AISI 316)			1
3	Motor bracket	Cast iron EN-GJL-200-EN 1561			1
4	Casing cover	EN 1.4404 (AISI 316L)			1
6	Coupling	EN 1.4404 (AISI 316L)	See table p. 318		1
7	Impeller	EN 1.4401 (AISI 316)			1
11	Mechanical seal	SiC/SiC/FPM	See p. 313-317		1
24	Plug	EN 1.4404 (AISI 316L)	G3/8	EPE DRAWING	1
25	Plug	EN 1.4404 (AISI 316L)	G3/8	EPE DRAWING	1
26	"O" ring	FPM [2]	227.96x5.34	OR 6895	1
32	Key	EN 1.4401 (AISI 316)	8x7x30	UNI 6604	1
34	Impeller nut	EN 1.4404 (AISI 316L)	M20x1.5	UNI 7474	1
44	Protection	EN 1.4301 (AISI 304)		EPE DRAWING	2
75	Washer (plug)	EN 1.4404 (AISI 316L)			1
76	Washer (plug)				1
77	O-ring (plug)	FPM [2]			1
78	O-ring (plug)				1
200	Screw	Stainless steel A2-70 class ISO 3506/1	M 10x35	UNI 5739	10
200A	Screw		M 10x30		2
235	Washer	EN 1.4301(AISI 304)	10.5	UNI 8842	12
244	Pin [1]	EN 1.4301(AISI 304)	4x15		1

Counterflange kit on request see p. 319-320

[1] Not for H and E option
[2] FPM for H-HW-HSW version
EPDM for E version, Q1Q1EGG, Q1U3EGG, U3CEGG, Q1AEGG

CONSTRUCTION

50Hz

Rev. H

SECTIONAL VIEW DRAWING
3LSF4 65-250, 80

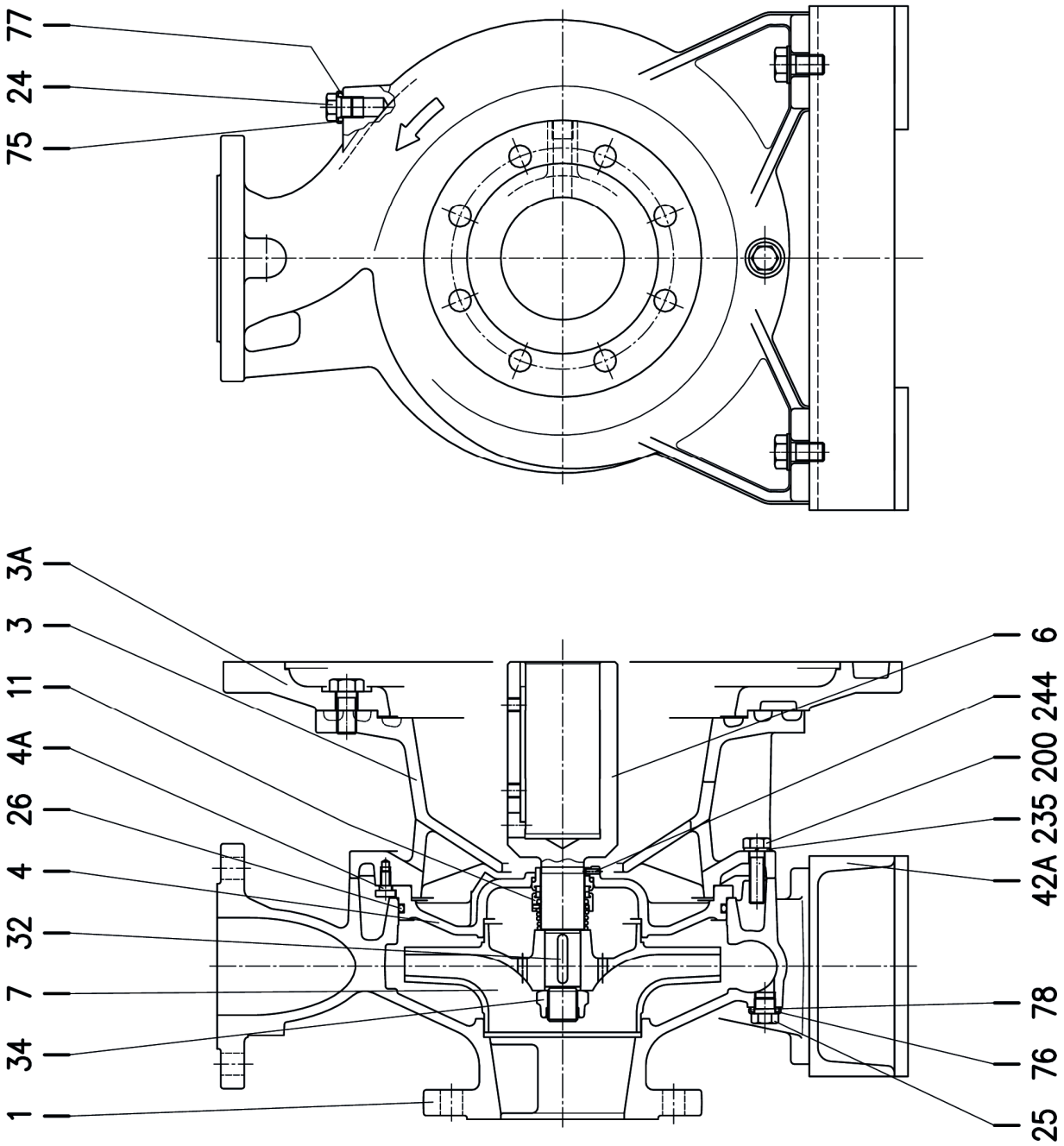

CONSTRUCTION

50Hz

Rev. H

SECTIONAL VIEW TABLE
3LSF4 65-250, 80

N°	PART NAME			MATERIAL	DIMENSIONS	STANDARD	Q.TY
1	Casing			EN 1.4401 (AISI 316)			1
3	Motor bracket			Cast iron EN-GJL-200-EN 1561			1
3A	Adapter ring			Cast iron EN-GJL-200-EN 1561			[1]
4	Casing cover			EN 1.4401 (AISI 316)			1
4A	Screw for casing cover			EN 1.4301(AISI 304)			2
6	Coupling	65-250	d=24 mm	EN 1.4462 (Duplex stainless steel)			1
		80-200	d=24 mm	EN 1.4404 (AISI 316L) for 22 kW			
				EN 1.4462 (Duplex stainless steel) for 30-37 kW			
		80-250	d=29 mm	EN 1.4462 (Duplex stainless steel)			
7	Impeller			EN 1.4401 (AISI 316)			1
11	Mechanical seal			SiC/SiC/FPM	See p. 313-317		1
24	Plug			EN 1.4404 (AISI 316L)	G3/8	EPE DRAWING	1
25	Plug			EN 1.4404 (AISI 316L)	G3/8	EPE DRAWING	1
26	"O" ring			FPM [4]	253.36x5.34	OR 6995	1
32	Key	65-250	d=24 mm	EN 1.4401 (AISI 316)	8 x7x 30	UNI 6604	1
		80-200					1
		80-250	d=29 mm		8x7x40		1
34	impeller nut	65-250	d=24 mm	EN 1.4404 (AISI 316L)	M20x1.5	UNI 7474	1
		80-200					1
		80-250	d=29 mm		M24x2		1
042A	Foot for pump			Aluminium/zincked steel (only for 80-250/55)			[2]
75	Washer (plug)			EN 1.4404 (AISI 316L)			1
76	Washer (plug)						1
77	O-ring (plug)			FPM [4]			1
78	O-ring (plug)						1
200	Screw			Stainless steel A2-70 class ISO 3506/1	M 12x45	UNI 5739	10
235	Washer			EN 1.4301(AISI 304)	13	UNI 8842	10
244	Pin [3]			EN 1.4301(AISI 304)	4x12		1

Counterflange kit on request, see table p. 319-320

[1] Only for 65-250/37, 80-200/37, 80-250/37, 80-250/45 and 80-250/55
[2] Q.TY=2 for 80-200/30 , 80-200/37 , 80-250/45
Q.TY=1 for 80-250/55
[3] Not for H and E version.
[4] FPM for H-HS-HW-HSW version
EPDM for E version 65-250 and 80-200: Q1Q1EGG, Q1U3EGG, U3CEGG, Q1AEGG
EPDM for ES only for 80-250 version

CONSTRUCTION

50Hz

Rev. H

SECTIONAL VIEW DRAWING
3(.)PF 32, 40, 50, 65

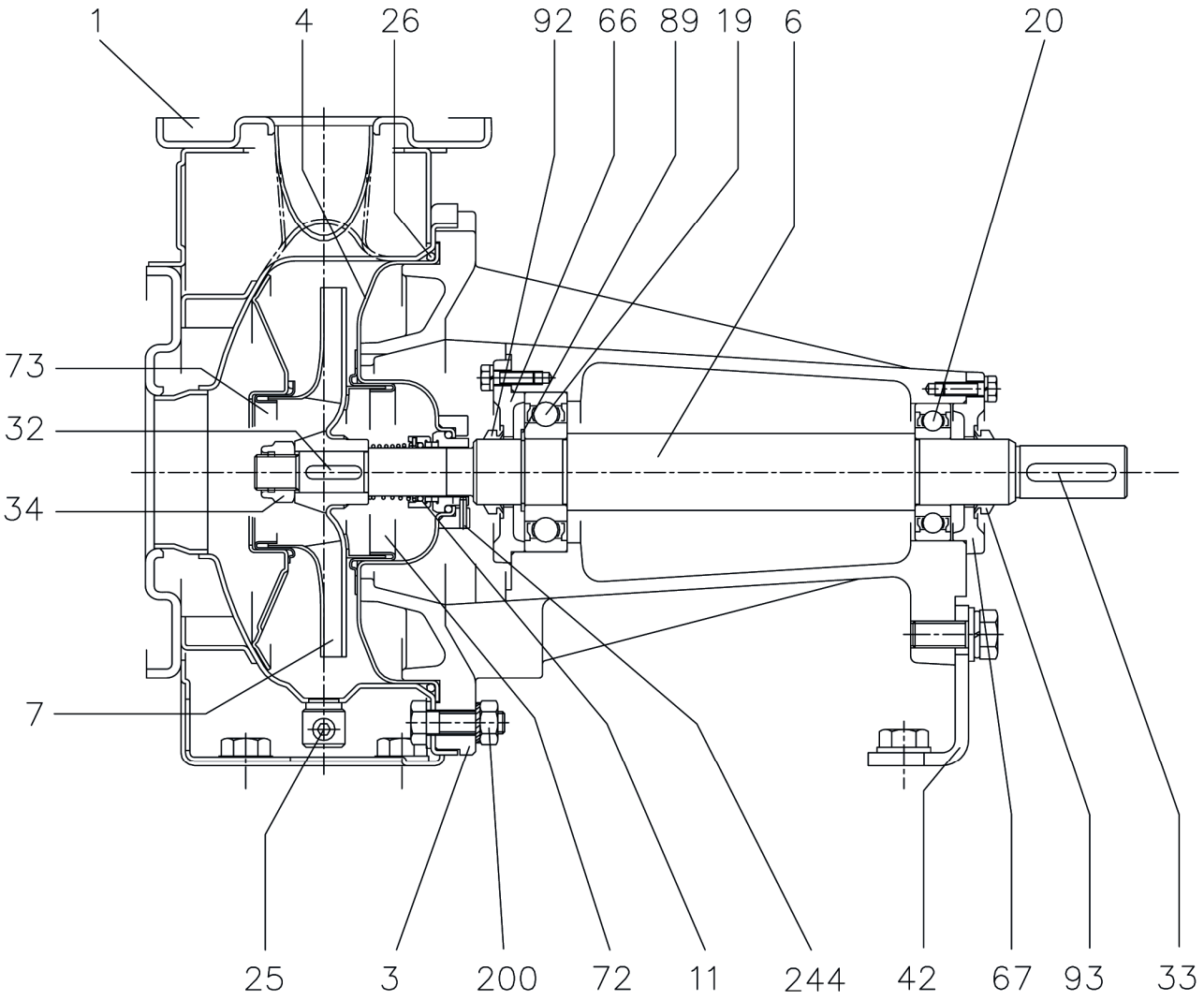

CONSTRUCTION

50Hz

Rev. H

SECTIONAL VIEW TABLE
3(.)PF 32, 40, 50, 65

N°	PART NAME		MATERIAL 3P	MATERIAL 3LP	DIMENSIONS	STANDARD	Q.TY
1	Casing		EN 1.4301 (AISI 304)	EN 1.4404 (AISI 316L)			1
3	Support		Cast iron EN-G JL-200-EN 1561				1
4	Casing cover		EN 1.4301 (AISI 304)	EN 1.4404 (AISI 316L)			1
6	Shaft - Part in contact with liquid		EN 1.4301 (AISI 304)	EN 1.4404 (AISI 316L)			1
7	Impeller	32,40,50	EN 1.4301 (AISI 304)	EN 1.4404 (AISI 316L)			1
		65-125/160/200	EN 1.440 1 (AISI 316)				
11	Mechanical seal		Carbon/Ceramic/NBR	SiC/SiC/FPM	See p. 313-317		1
19	Bearing		-		See table p. 312		1
20	Bearing		-		See table p. 312		1
25	Draing plug		EN 1.4401 (AI SI 316) / PTFE		R 1/8" L=8	DIN 906	1
26	O ring	32-125, 40-125	NBR [4]	FPM	158.11x5.34	OR 6625	1
		32-160, 40-160, 50-125, 65-125			183.52x5.34	OR 6720	
		32-200, 40-200, 50-160 , 50-200, 65-160, 65-200			227.96x5.34	OR 6895	
32	Key	Up to 11 Kw	EN 1.4301 (AISI 304)	EN 1.4401 (AISI 316)	6 x6x 25	UNI 6604	1
		15 kW and above			8 x7x 30		
33	Key		C 40		8x7x40	UNI 6604	1
34	Impeller nut	Up to 11kW	EN 1.4301 (AISI 304)	EN 1.4404 (AISI 316L)	M16x1.5	UNI 7474	1
		50-200/15			M18x1.5		
		15 kW and above			M20x1.5		
42	Pump support		Fe 37 Zi nc-coated			EBARA DRAWING	1
66	Impeller side bearing cover		Cast iron EN-G JL-200-EN 1561				1
67	Motor side bearing cover		Cast iron EN-G JL-200-EN 1561				1
72	Casing ring [1]		EN 1.4301 (AISI 304)	EN 1.4404 (AISI 316L)			1
73	Casing ring (not for 65 version)		EN 1.4301 (AISI 304)	EN 1.4404 (AISI 316L)			1
89	Snap ring		Carbon tool steels TC 80		Ø 40	UNI 7435	1
92	"V" ring		-		VS - 0030		1
93	"V" ring		-		VS - 0030		1
200	Screw	32-125, 40-125	Stainless steel A2 70 class ISO 3506/ 1		M 8x30	UNI 5739	8
		40-160, 40-200, 50-125, 50-160, 50-200, 65-125, 65-160, 65-200			M 10x35	UNI 5739	[2]
244	Pin [3]		-	EN 1.4301 (AISI 304)	4x15		1

Counterflange kit on request see p. 319-320

[1]For version 32-200, 40-200, 50-160, 50-200
[2] Q.TY=10 for 32-160, 40-160, 50-125, 65-125
Q.TY=12 for 32-200, 40-200, 50-160, 50-200, 65-160, 65-200
[3] Only for 65-160/15 and 65-200 -200
[4] FPM for H-HS-HW-HSW version
EPDM for E version, Q1AEGG, Q1U3EGG, U3CEGG, Q1Q1EGG, U3U3EGG
U3CU3EGG not available for models 65-160/15 and 65-200

CONSTRUCTION

50Hz

Rev. H

SECTIONAL VIEW DRAWING
3LPF 80-160

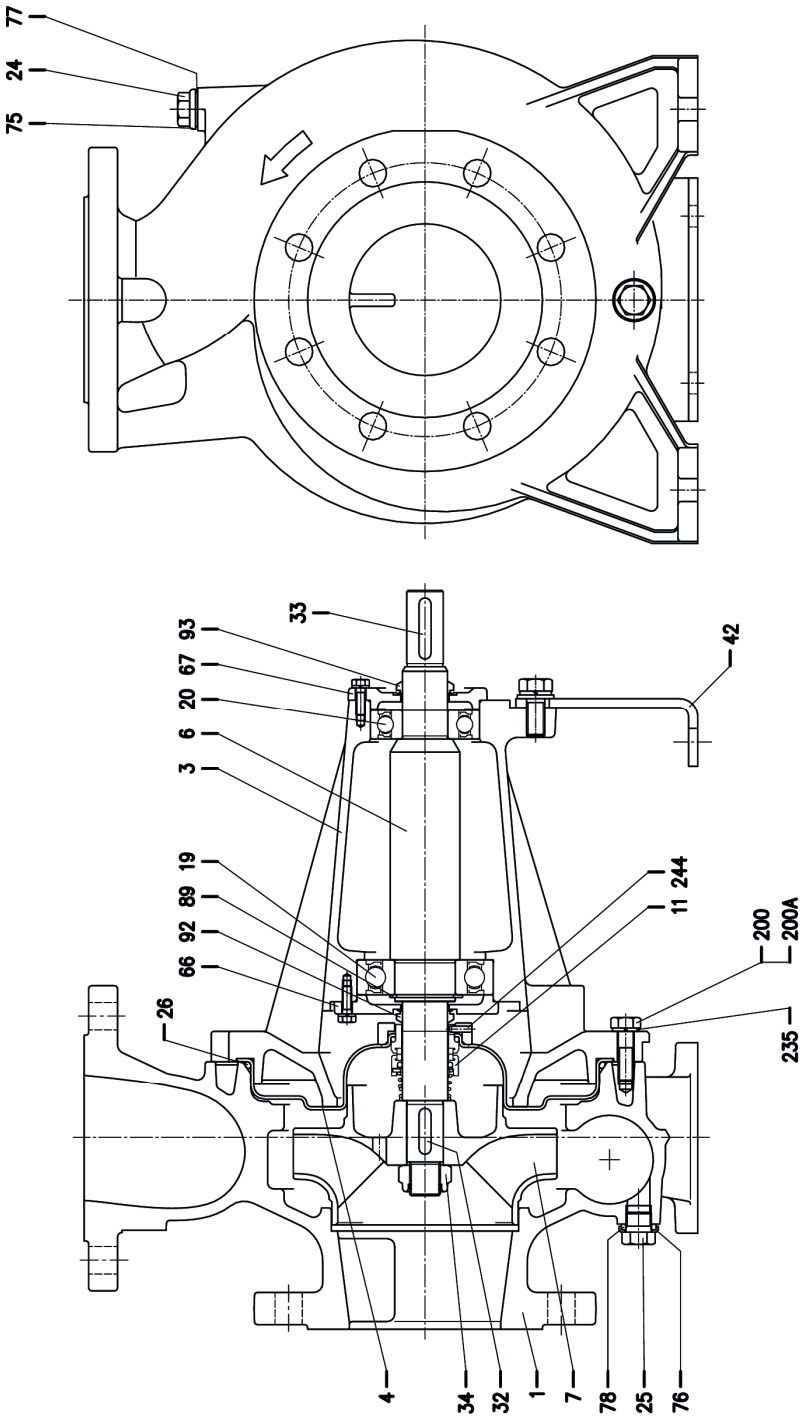

CONSTRUCTION

50Hz

Rev. H

SECTIONAL VIEW TABLE
3LPF 80-160

N°	PART NAME	MATERIAL	DIMENSIONS	STANDARD	Q.TY
1	Casing	EN 1.4401 (AISI 316)			1
3	Support	Cast iron EN-GJL-200-EN 1561			1
4	Casing cover	EN 1.4404 (AISI 316L)			1
6	Shaft	EN 1.4404 (AISI316L)-Part in contact with liquid			1
7	Impeller	EN 1.4401 (AISI 316)			1
11	Mechanical seal	SiC/SiC/FPM	See p. 313-317		1
19	Bearing	-	See table p. 312		1
20	Bearing	-	See table p. 312		1
24	Plug	EN 1.4404 (AISI 316L)	G3/8	EPE DRAWING	1
25	Plug	EN 1.4404 (AISI 316L)	G3/8	EPE DRAWING	1
26	"O" ring	FPM [2]	227.96x5.34	OR 6895	1
32	Key	EN 1.4401 (AISI 316)	8x7x30	UNI 6604	1
33	Key	C 40	8x7x40		1
34	Impeller nut	EN 1.4404 (AISI 316L)	M20x1.5	UNI 7474	1
42	Pump support	Zincked steel		EPE DRAWING	1
66	Impeller side bearing cover	Cast iron EN-GJL-200-EN 1561			1
67	Motor side bearing cover	Cast iron EN-GJL-200-EN 1561			1
75	Washer (plug)	EN 1.4404 (AISI 316L)			1
76	Washer (plug)				1
77	O-ring (plug)	FPM [2]			1
78	O-ring (plug)				1
89	Snap ring	Carbon tool steels TC 80	Ø 40	UNI 7435	1
92	"V" ring	-	VS-0030		1
93	"V" ring				1
200	Screw	Stainless steel A2 70 class ISO 3506/1	M 10x35	UNI 5739	10
200A	Screw		M 10x30		2
235	Washer	EN 1.4301(AISI 304)	10.5	UNI 8842	12
244	Pin [1]	EN 1.4301(AISI 304)	4x15		1

Counterflange kit on request, see table p. 319-320

[1] Not for H and E option.
[2] FPM for H-HW-HSW version
EPDM for E version, Q1Q1EGG, Q1U3EGG, U3CEGG, Q1AEGG

SECTIONAL VIEW DRAWING
3LPF 65-250, 80

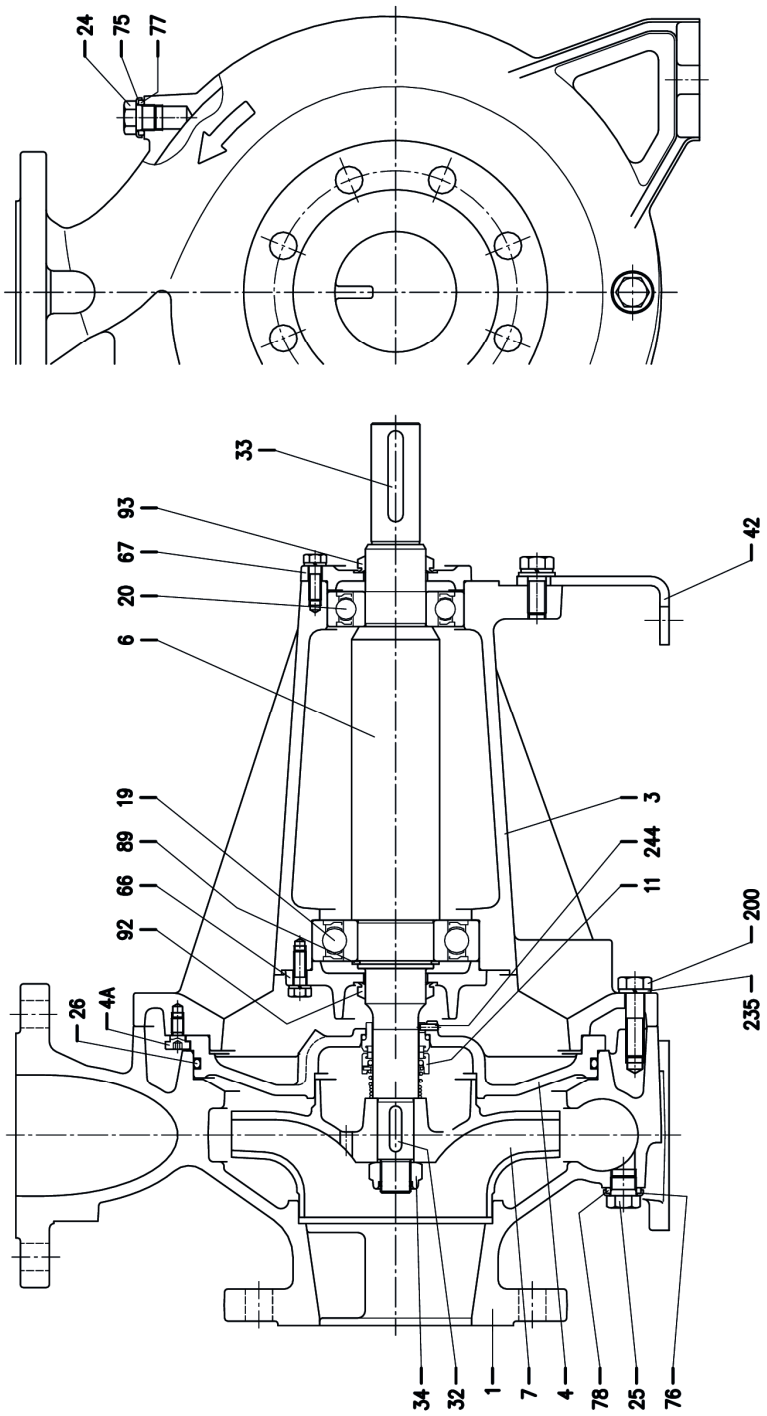

CONSTRUCTION

50Hz

Rev. H

SECTIONAL VIEW TABLE
3LPF 65-250, 80

N°	PART NAME			MATERIAL	DIMENSIONS	STANDARD	Q.TY
1	Casing			EN 1.4401 (AISI 316)			1
3	Support			Cast iron EN-GJL-200-EN 1561			1
4	Casing cover			EN 1.4401 (AISI 316)			1
4A	Screw for casing cover			EN 1.4301 (AISI 304)			2
6	Shaft			EN 1.4462 (Duplex stainless steel) Part in contact with liquid			1
7	Impeller			EN 1.4401 (AISI 316)			1
11	Mechanical seal			SiC/SiC/FPM	See p. 313-317		1
19	Bearing			-	See table p. 312		1
20	Bearing			-	See table p. 312		1
24	Plug			EN 1.4404 (AISI 316L)	G3/8		1
25	Plug			EN 1.4404 (AISI 316L)	G3/8		1
26	"O" ring			FPM [2]	253.36x5.34	OR 6995	1
32	Key	65-250	d=24 mm	EN 1.4401 (AISI 316)	8 x7x 30	UNI 6604	1
		80-200					1
		80-250	d=29 mm		8x7x40		1
33	Key			C 40	10x8x60	UNI 6604	1
34	impeller nut	65-250	d=24 mm	EN 1.4404 (AISI 316L)	M20x1.5	UNI 7474	1
		80-200					1
		80-250	d=29 mm		M24x2		1
42	Pump support			Zincked steel			1
66	Impeller side bearing cover			Cast iron EN-GJL-200-EN 1561			1
67	Motor side bearing cover			Cast iron EN-GJL-200-EN 1561			1
75	Washer (plug)			EN 1.4404 (AISI 316L)			1
76	Washer (plug)						1
77	O-ring (plug)			FPM [2]			1
78	O-ring (plug)						1
89	Snap ring			Carbon tool steels TC 80	Ø 50	UNI 7435	1
92	"V" ring			-	VS-0040		1
93	"V" ring						1
200	Screw			Stainless steel A2 70 class ISO 3506/1	M 12x45	UNI 5739	10
235	Washer			EN 1.4301 (AISI 304)	13	UNI 8842	10
244	Pin		[1]	EN 1.4301 (AISI 304)	4x12	UNI 6873	1

Counterflange kit on request, see table p. 319-320

[1] Not for H and E option.
[2] FPM for H-HW-HSW version
EPDM for E version, 65-250 and 80-200: Q1Q1EGG, Q1U3EGG, U3CEGG, Q1AEGG
EPDM for ES only for 80-250 version

3(.)PF BALL BEARING

Type pumps 50 Hz	Ball bearing	
	Pump side	Motor side
32-125	6306-2RS1 C3	6206-2RS1 C3
32-160/R		
32-160		
32-200/R	6308-2RS1 C3	6306-2RS1 C3
32-200		
32-200/L		
40-125/R	6306-2RS1 C3	6206-2RS1 C3
40-125		
40-160/R		
40-160		
40-200/R	6308-2RS1 C3	6306-2RS1 C3
40-200		
40-200/L		
50-125/S	6306-2RS1 C3	6206-2RS1 C3
50-125/R		
50-125		
50-160/R	6308-2RS1 C3	6306-2RS1 C3
50-160		
50-200/R		
50-200		
50-200/L		
65-125/R	6306-2RS1 C3	6206-2RS1 C3
65-125		
65-125/L		
65-160/S	6308-2RS1 C3	6306-2RS1 C3
65-160/R		
65-160		
65-160/L		
65-200/R		
65-200		
65-200/L		
65-250	6310-2RS1 C3	6308-2RS1 C3
65-250/L		
80-160/S	6308-2RS1 C3	6306-2RS1 C3
80-160/R		
80-160		
80-160/L		
80-200/R	6310-2RS1 C3	6308-2RS1 C3
80-200		
80-200/L		
80-250/R		
80-250		
80-250/L		

CONSTRUCTION

50Hz

Rev. H

MECHANICAL SEAL (Standard, H, E and Special version)

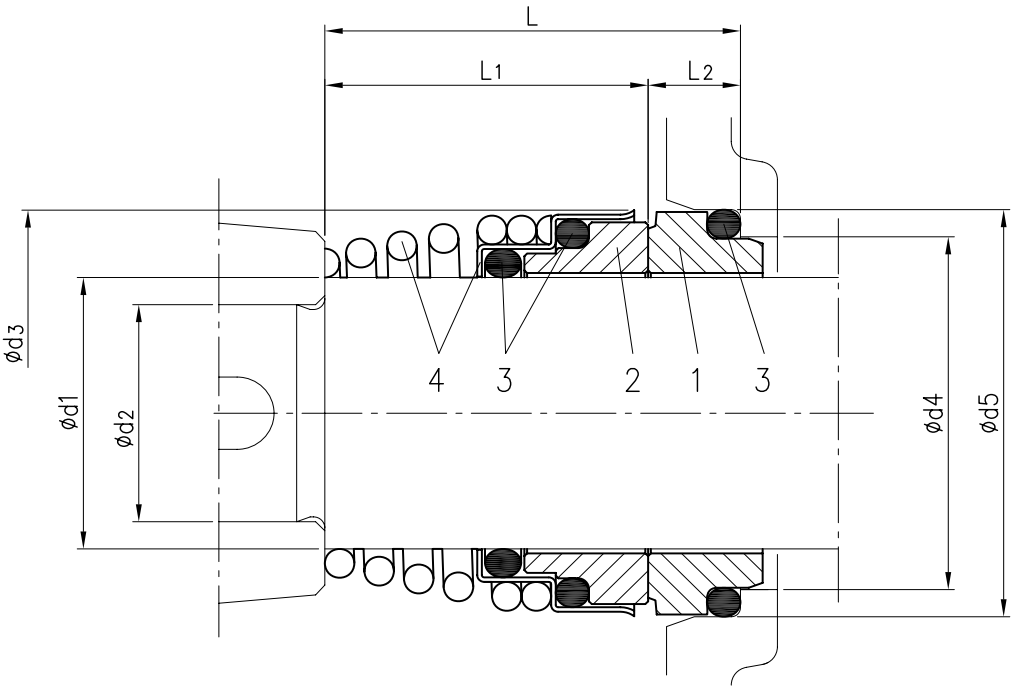

Version	Pump type	Dimensions								Material			
		d1	d2	d3	d4	d5	L	L1	L2	**1** Stationary seal ring	**2** Rotary seal ring	**3** Rubber	**4** Frame + spring
Standard	32-125/160/200 40-125/160/200 50-125/160/200 65-125 65-160/7.5-9.2-11	22	19	38	31	37	37.5	27.5	10	Carbon	Ceramic	NBR	EN 1.4401 (AISI 316)
	65-160/15 65-200	30	24	46	39	45	42.5	32.5	10				
H	32-125/160/200 40-125/160/200 50-125/160/200 65-125 65-160/7.5-9.2-11	22	19	38	31	37	37.5	27.5	10	Carbon	Ceramic	FPM	EN 1.4401 (AISI 316)
	65-160/15 65-200/250 80-160/200	30	24	46	39	45	42.5	32.5	10				
	80-250	35	29	50	44	50	42.5	32.5	10				
E	32-125/160/200 40-125/160/200 50-125/160/200 65-125 65-160/7.5-9.2-11	22	19	38	31	37	37.5	27.5	10	Carbon	Ceramin	EPDM	EN 1.4401 (AISI 316)
	65-160/15 65-200/250 80-160/200	30	24	46	39	45	42.5	32.5	10				
Q1AEGG*	65-160/15 65-200/250 80-160/200	30	24	46	39	45	42.5	32.5	10	Silicon Carbide	Metallised Carbon	EPDM	EN 1.4401 (AISI 316)

* The drawing is only indicative

CONSTRUCTION

50Hz

Rev. H

MECHANICAL SEAL (L version Ø 22)

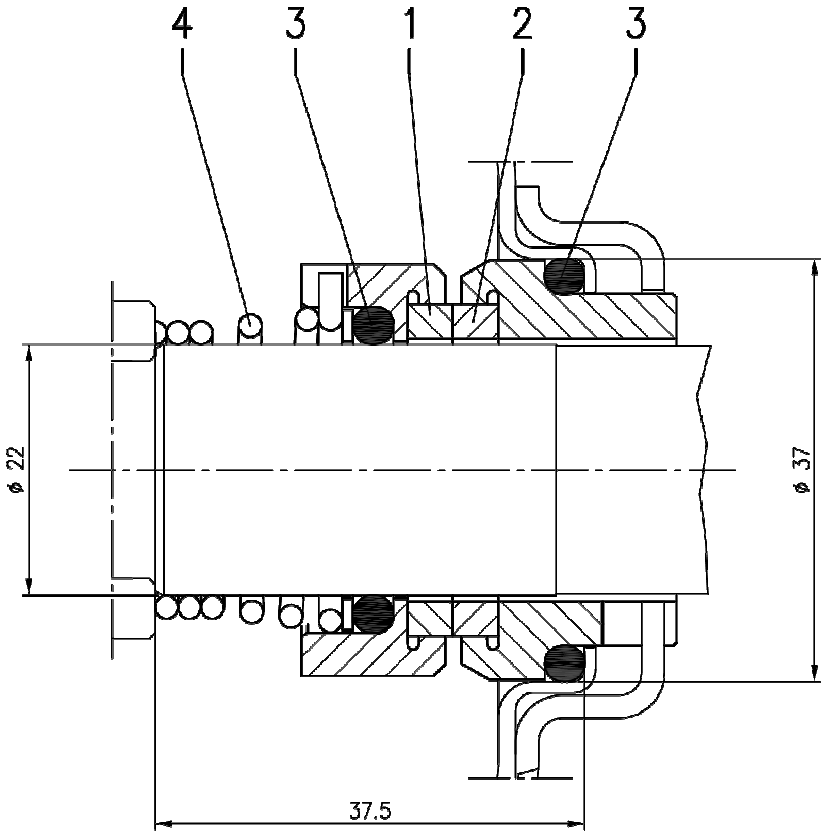

Version	Pump type	Material			
		1 Stationary seal ring	2 Rotary seal ring	3 Rubber	4 Frame + spring
L ø22	32-125/160/200 40-125/160/200 50-125/160/200 65-125 65-160/7.5-9.2-11	SiC	SiC	FPM	EN 1.4571 (AISI 316Ti)

CONSTRUCTION

50Hz

Rev. H

MECHANICAL SEAL (L version Ø 30-35)

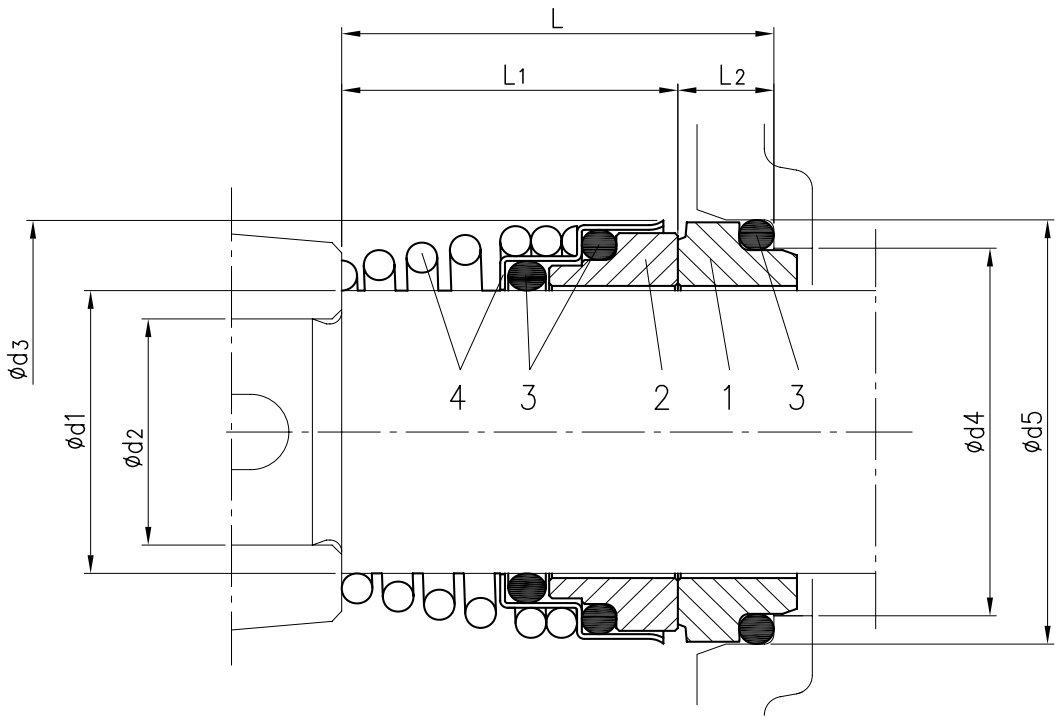

Version	Pump type	Dimensions								Material			
		d1	d2	d3	d4	d5	L	L1	L2	**1** Stationary seal ring	**2** Rotary seal ring	**3** Rubber	**4** Frame + spring
L ø30	65-160/15 65-200/250 80-160/200	30	24	44	39	45	42.5	31	11.5	SiC	SiC	FPM	EN 1.4571 (AISI 316Ti)
L ø35	80-250	35	29	49	44	50	42.5	31	11.5	SiC	SiC	FPM	EN 1.4571 (AISI 316Ti)

CONSTRUCTION

50Hz

Rev. H

MECHANICAL SEAL (HS version and Special version Ø22)

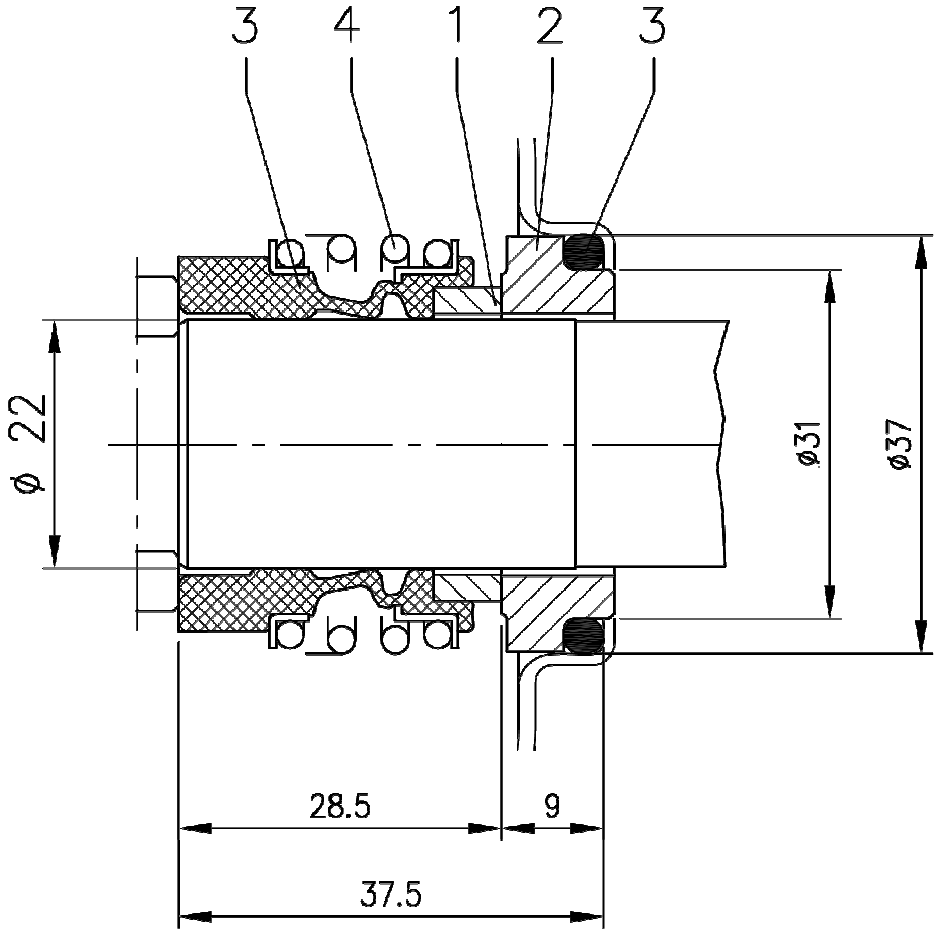

Version	Pump type	Material 1 Stationary seal ring	2 Rotary seal ring	3 Rubber	4 Frame + spring
HS ø22	32-125/160/200 40-125/160/200 50-125/160/200 65-125 65-160/7.5-9.2-11	SiC	SiC	FPM	EN 1.4571 (AISI 316Ti)
Q1AEGG*	32-125/160/200 40-125/160/200 50-125/160/200 65-125 65-160/7.5-9.2-11	Silicon Carbide	Metallised Carbon	EPDM	EN 1.4401 (AISI 316)

* The drawing is only indicative

CONSTRUCTION

50Hz

Rev. H

MECHANICAL SEAL (HS Ø30, HW, HSW, ES and Special version)

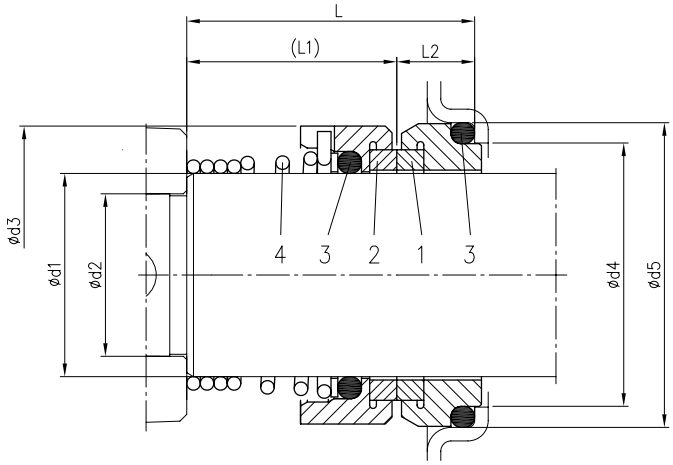

Version	Pump type	Dimensions								Material			
		d1	d2	d3	d4	d5	L	L1	L2	1 Stationary seal ring	2 Rotary seal ring	3 Rubber	4 Frame + Spring
HS Ø30	65-160/15 65-200	30	24	46	39	45	42.5	31	11.5	SiC	SiC	FPM	EN 1.4571 (AISI 316Ti)
HW	32-125/160/200 40-125/160/200 50-125/160/200 65-125 65-160/7.5-9.2-11	22	19	38	31	37	37.5	27.5	10	Tungsten Carbide	Tungsten Carbide	FPM	EN 1.4401 (AISI 316)
	65-160/15 65-200/250 80-160/200	30	24	46	39	45	42.5	32.5	10				
	80-250	35	29	50	44	50	42.5	32.5	10				
HSW	32-125/160/200 40-125/160/200 50-125/160/200 65-125 65-160/7.5-9.2-11	22	19	38	31	37	37.5	27.5	10	Tungsten Carbide	SiC	FPM	EN 1.4401 (AISI 316)
	65-160/15 65-200/250 80-160/200	30	24	46	39	45	42.5	32.5	10				
	80-250	35	29	50	44	50	42.5	32.5	10				
ES	80-250	35	29	50	44	50	42.5	32.5	10	Carbon	SiC	EPDM	EN 1.4401 (AISI 316)
U3U3EGG*	32-125/160/200 40-125/160/200 50-125/160/200 65-125 65-160/7.5-9.2-11	22	19	38	31	37	37.5	27.5	10	Tungsten Carbide	Tungsten Carbide	EPDM	EN 1.4401 (AISI 316)
Q1Q1EGG*	32-125/160/200 40-125/160/200 50-125/160/200 65-125 65-160/7.5-9.2-11	22	19	38	31	37	37.5	27.5	10	Silicon Carbide	Silicon Carbide	EPDM	EN 1.4401 (AISI 316)
	65-160/15 65-200/250 80-160/200	30	24	46	39	45	42.5	32.5	10				
Q1U3EGG*	32-125/160/200 40-125/160/200 50-125/160/200 65-125 65-160/7.5-9.2-11	22	19	38	31	37	37.5	27.5	10	Silicon Carbide	Tungsten Carbide	EPDM	EN 1.4401 (AISI 316)
	65-160/15 65-200/250 80-160/200	30	24	46	39	45	42.5	32.5	10				
U3CEGG*	32-125/160/200 40-125/160/200 50-125/160/200 65-125 65-160/7.5-9.2-11	22	19	38	31	37	37.5	27.5	10	Tungsten Carbide	Silicon Carbide	EPDM	EN 1.4401 (AISI 316)
	65-160/15 65-200/250 80-160/200	30	24	46	39	45	42.5	32.5	10				

* The drawing is only indicative

CONSTRUCTION

50Hz

Rev. H

COUPLING

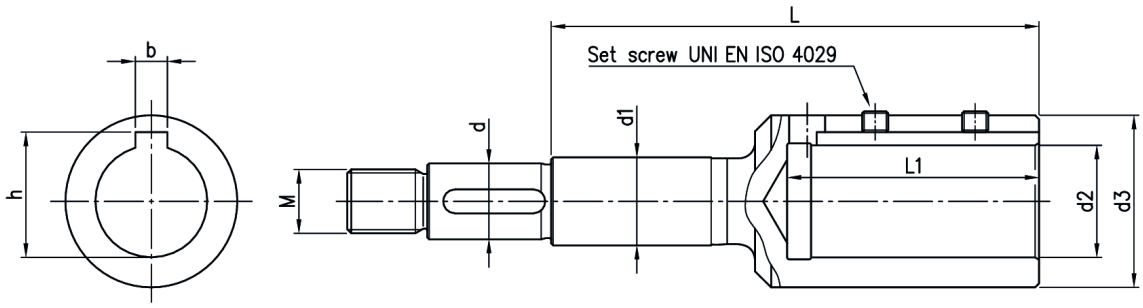

Type pumps	kW	HP	Motor Size	Dimensions mm									
				d	d1	d2	d3	M	L	L1	b	h	Set screw
3(.)SF 32-125/1.1	1.1	1.5	80	19	22	19	33	M16x1.5	98	43	6	21.8	M6x6
3(.)SF 32-160/1.5	1.5	2	90	19	22	24	39	M16x1.5	110	53	8	27.3	M8x8
3(.)SF 32-160/2.2	2.2	3	90	19	22	24	39	M16x1.5	110	53	8	27.3	M8x8
3(.)SF 32-200/3.0	3	4	100	19	22	28	43	M16x1.5	122	63	8	31.3	M8x8
3(.)SF 32-200/4.0	4	5.5	112	19	22	28	43	M16x1.5	122	63	8	31.3	M8x8
3(.)SF 32-200/5.5	5.5	7.5	132	19	22	38	58	M16x1.5	145	84	10	41.3	M8x8
3(.)SF 32-200/7.5	7.5	10	132	19	22	38	58	M16x1.5	145	84	10	41.3	M8x8
3(.)SF 40-125/1.5	1.5	2	90	19	22	24	39	M16x1.5	110	53	8	27.3	M8x8
3(.)SF 40-125/2.2	2.2	3	90	19	22	24	39	M16x1.5	110	53	8	27.3	M8x8
3(.)SF 40-160/3.0	3	4	100	19	22	28	43	M16x1.5	122	63	8	31.3	M8x8
3(.)SF 40-160/4.0	4	5.5	112	19	22	28	43	M16x1.5	122	63	8	31.3	M8x8
3(.)SF 40-200/5.5	5.5	7.5	132	19	22	38	58	M16x1.5	145	84	10	41.3	M8x8
3(.)SF 40-200/7.5	7.5	10	132	19	22	38	58	M16x1.5	145	84	10	41.3	M8x8
3(.)SF 40-200/11	11	15	160	19	22	42	63	M16x1.5	178	114	12	45.3	M8x8
3(.)SF 50-125/2.2	2.2	3	90	19	22	24	39	M16x1.5	110	53	8	27.3	M8x8
3(.)SF 50-125/3.0	3	4	100	19	22	28	43	M16x1.5	122	63	8	31.3	M8x8
3(.)SF 50-125/4.0	4	5.5	112	19	22	28	43	M16x1.5	122	63	8	31.3	M8x8
3(.)SF 50-160/5.5	5.5	7.5	132	19	22	38	58	M16x1.5	145	84	10	41.3	M8x8
3(.)SF 50-160/7.5	7.5	10	132	19	22	38	58	M16x1.5	145	84	10	41.3	M8x8
3(.)SF 50-200/9.2	9.2	12.5	132	19	22	38	58	M16x1.5	145	84	10	41.3	M8x8
3(.)SF 50-200/11	11	15	160	19	22	42	63	M16x1.5	178	114	12	45.3	M8x8
3(.)SF 50-200/15	15	20	160	22	22	42	63	M18x1.5	209	114	12	45.3	M8x8
3(.)SF 65-125/4.0	4	5.5	112	19	22	28	43	M16x1.5	122	63	8	31.3	M8x8
3(.)SF 65-125/5.5	5.5	7.5	132	19	22	38	58	M16x1.5	145	84	10	41.3	M8x8
3(.)SF 65-125/7.5	7.5	10	132	19	22	38	58	M16x1.5	145	84	10	41.3	M8x8
3(.)SF 65-160/7.5	7.5	10	132	19	22	38	58	M16x1.5	145	84	10	41.3	M8x8
3(.)SF 65-160/9.2	9.2	12.5	132	19	22	38	58	M16x1.5	145	84	10	41.3	M8x8
3(.)SF 65-160/11	11	15	160	19	22	42	63	M16x1.5	178	114	12	45.3	M8x8
3(.)SF 65-160/15	15	20	160	24	30	42	63	M20x1.5	184	114	12	45.3	M8x8
3(.)SF 65-200/15	15	20	160	24	30	42	63	M20x1.5	184	114	12	45.3	M8x8
3(.)SF 65-200/18.5	18.5	25	160	24	30	42	63	M20x1.5	184	114	12	45.3	M8x8
3(.)SF 65-200/22	22	30	180	24	30	48	72	M20x1.5	184	114	14	51.8	M10x10
3(.)SF 65-250/30	30	40	200	24	30	55	85	M20x1.5	184	114	16	59.3	M12x12
3(.)SF 65-250/37	37	50	200	24	30	55	85	M20x1.5	184	114	16	59.3	M12x12
3(.)SF 80-160/11	11	15	160	24	30	42	63	M20x1.5	184	114	12	45.3	M8x8
3(.)SF 80-160/15R	15	20	160	24	30	42	63	M20x1.5	184	114	12	45.3	M8x8
3(.)SF 80-160/15	15	20	160	24	30	42	63	M20x1.5	184	114	12	45.3	M8x8
3(.)SF 80-160/18.5	18.5	25	160	24	30	42	63	M20x1.5	184	114	12	45.3	M8x8
3(.)SF 80-200/22	22	30	180	24	30	48	72	M20x1.5	184	114	14	51.8	M10x10
3(.)SF 80-200/30	30	40	200	24	30	55	85	M20x1.5	184	114	16	59.3	M12x12
3(.)SF 80-200/37	37	50	200	24	30	55	85	M20x1.5	184	114	16	59.3	M12x12
3(.)SF 80-250/37	37	50	200	29	35	55	85	M24x2	206	114	16	59.3	M12x12
3(.)SF 80-250/45	45	60	225	29	35	55	85	M24x2	206	114	16	59.3	M12x12
3(.)SF 80-250/55	55	75	250	29	35	60	89	M24x2	218	144	18	64.4	M12x12

CONSTRUCTION

50Hz

Rev. H

COUNTERFLANGE ZINCKED STEEL

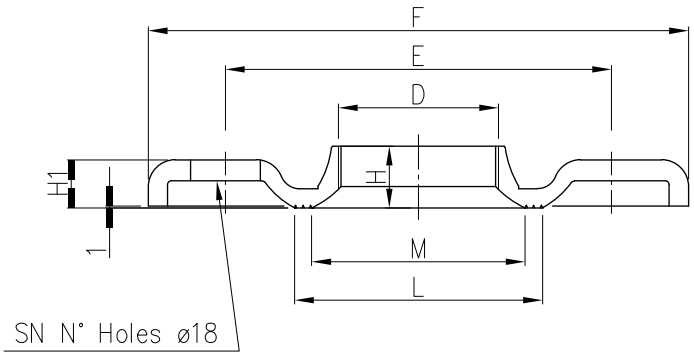

Counterflange									Screw	
DN	D	E	F	H	H1	L	M	SN	DIMENSIONS	MATERIAL
32	G 1 1/4	100	100	15	11.5	67	50	4	M16x55	Zn. Steel 8.8 strenght class ISO 898-1
40	G 1 1/2	110	110	17.5	11.5	72	58	4		
50	G2	125	125	19	15	89	70	4		
65	G 2 1/2	145	185	23	14	104	88	4		
80	G3	160	200	24	16	117.5	100	8	M16x60	
100	G4	180	220	29	16	144	125	8		

COUNTERFLANGE EN 1.4404 (AISI 316L)

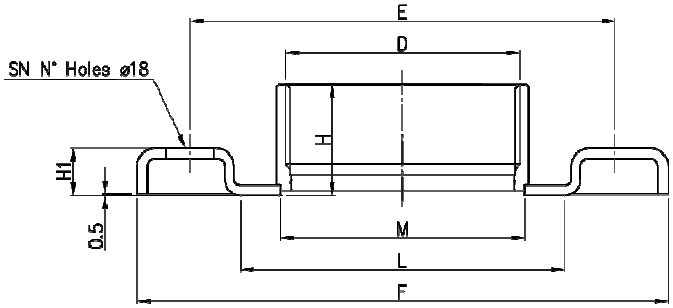

Counterflange									Screw	
DN	D	E	F	H	H1	L	M	SN	DIMENSIONS	MATERIAL
32	G 1 1/4	100	140	29.5	14	66	44	4	M16x55	A2-70 class ISO 3506-1
40	G 1 1/2	110	150	29.5	14	71	50.5			
50	G 2	125	165	34	16	83	63			
65	G 2 1/2	145	185	40	16	103	80			
80	G3	160	200	42	18	122	92	8	M16x60	

CONSTRUCTION

50Hz

Rev. H

COUNTERFLANGE EN 1.4404 (AISI 316L) DN100

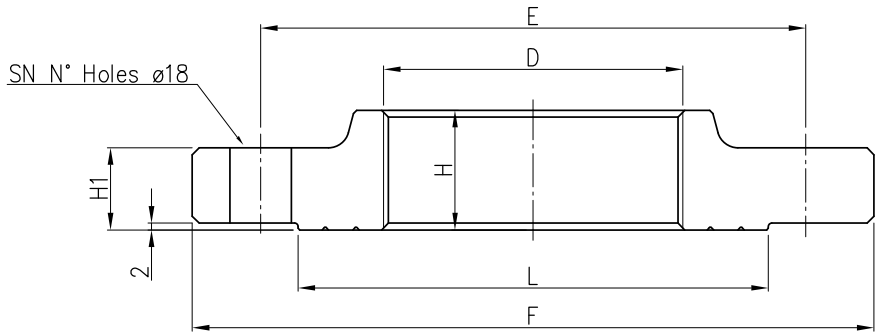

Counterflange								Screw	
DN	D	E	F	H	H1	L	SN	DIMENSIONS	MATERIAL
100	G4	180	220	35	20	150	8	M16x70	A2-70 class ISO 3506-1

GASKET

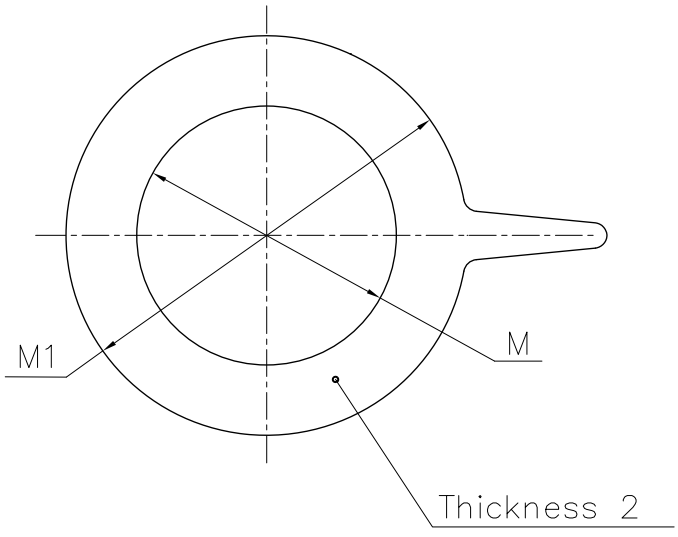

DN	M	M1
32	38	82
40	50	93
50	60	107
65	80	125
80	90	140
100	115	160

Material: EPDM for standard version
FPM for L version

DIMENSIONS

50Hz

Rev. H

PUMP 3(.)SF 32, 40, 50

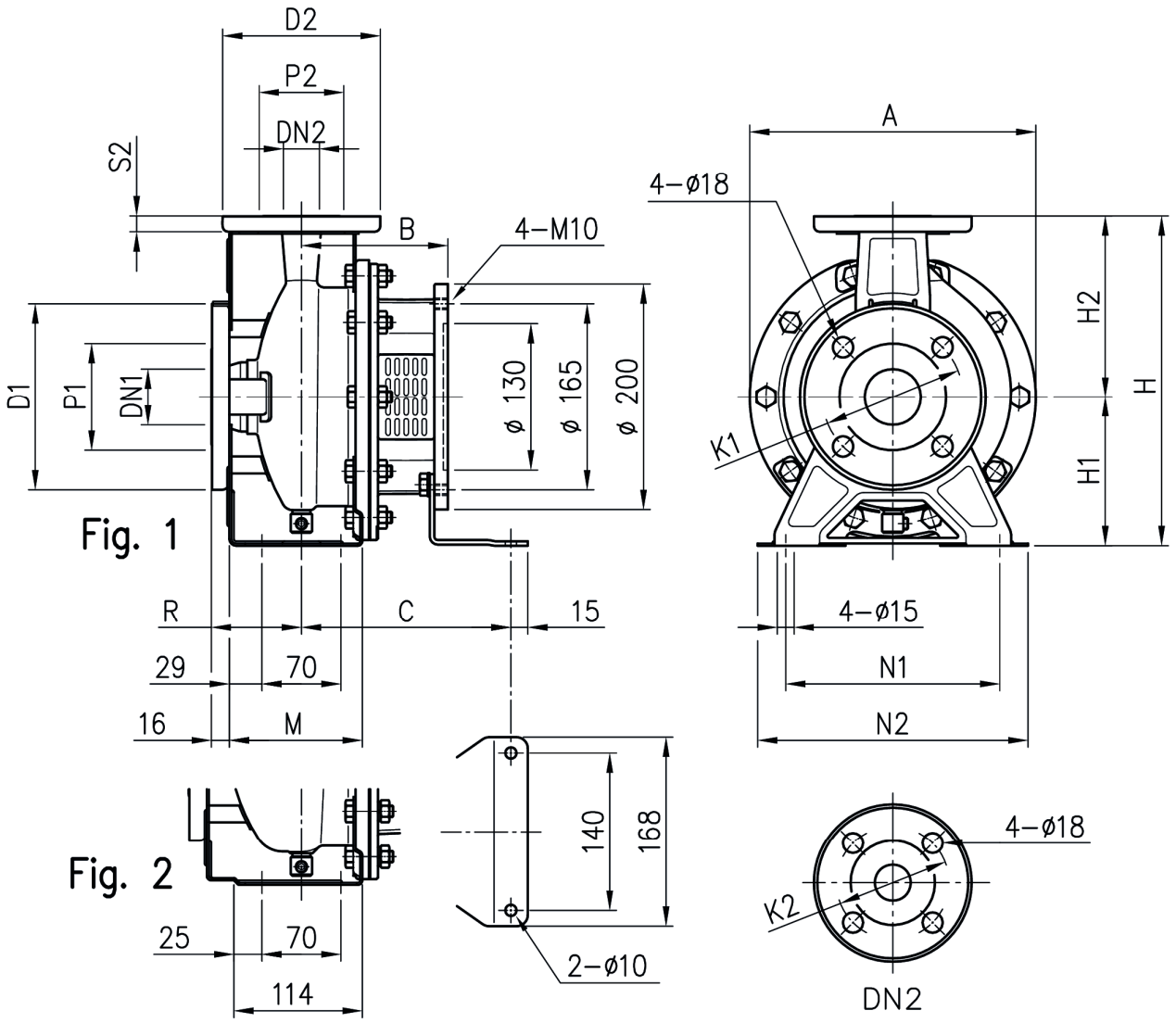

Pump type	Dimensions [mm]																				Weight [kgf]
	Fig.	DN1	P1	K1	D1	DN2	P2	K2	D2	S2	H	H1	H2	M	N1	N2	R	A	B	C	
32-125/1.1	1	50	95	125	165	32	75	100	140	14	252	112	140	114	140	190	80	213	118	174	13.1
32-160/1.5	1	50	95	125	165	32	75	100	140	14	292	132	160	118	190	240	80	254	130	186	17
32-160/2.2	1	50	95	125	165	32	75	100	140	14	292	132	160	118	190	240	80	254	130	186	17
40-125/1.5	1	65	115	145	185	40	80	110	150	14	252	112	140	114	160	210	80	213	130	186	14.4
40-125/2.2	1	65	115	145	185	40	80	110	150	14	252	112	140	114	160	210	80	213	130	186	14.5
50-125/2.2	2	65	115	145	185	50	95	125	165	16	292	132	160	-	190	240	100	254	130	186	20

DIMENSIONS

50Hz

Rev. H

PUMP 3(.)SF 32, 40, 50, 65

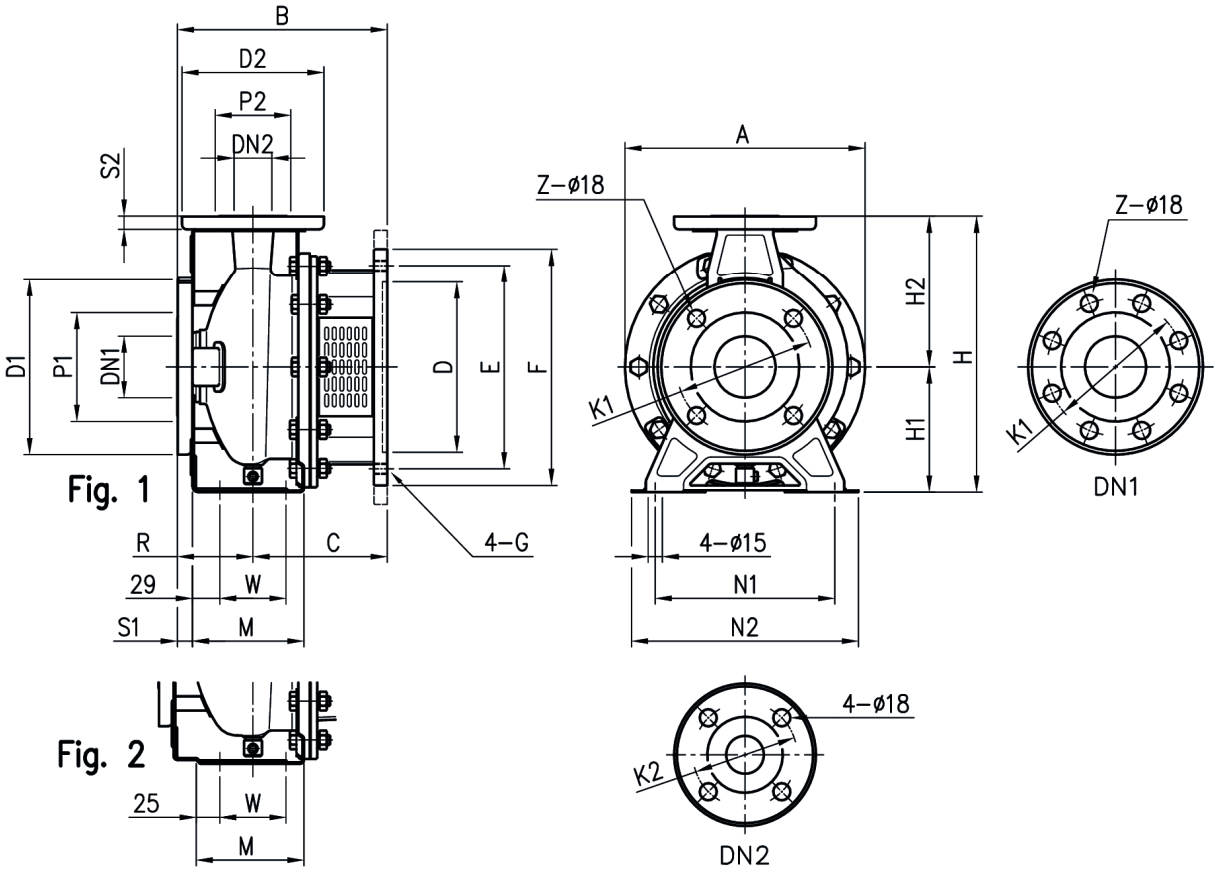

Pump type	Fig.	Dimensions [mm]																												Weight [kgf]
		DN1	P1	K1	D1	S1	Z [1]	Z [2]	DN2	P2	K2	D2	S2	H	H1	H2	M	N1	N2	R	W	A	B	C	D	E	F	G	
32-200/3	1	50	95	125	165	16	4	-	32	75	100	140	14	340	160	180	119	190	240	80	70	296	222	142	180	215	250	M12	24
32-200/4	1	50	95	125	165	16	4	-	32	75	100	140	14	340	160	180	119	190	240	80	70	296	222	142	180	215	250	M12	24
32-200/5.5	1	50	95	125	165	16	4	-	32	75	100	140	14	340	160	180	119	190	240	80	70	296	245	165	230	265	300	M12	28
32-200/7.5	1	50	95	125	165	16	4	-	32	75	100	140	14	340	160	180	119	190	240	80	70	296	245	165	230	265	300	M12	28
40-160/3	1	65	115	145	185	16	4	-	40	80	110	150	14	292	132	160	118	190	240	80	70	254	222	142	180	215	250	M12	19.5
40-160/4	1	65	115	145	185	16	4	-	40	80	110	150	14	292	132	160	118	190	240	80	70	254	222	142	180	215	250	M12	20
40-200/5.5	2	65	115	145	185	16	4	-	40	80	110	150	14	340	160	180	115	212	265	100	70	296	265	165	230	265	300	M12	28
40-200/7.5	2	65	115	145	185	16	4	-	40	80	110	150	14	340	160	180	115	212	265	100	70	296	265	165	230	265	300	M12	28
40-200/11	2	65	115	145	185	16	4	-	40	80	110	150	14	340	160	180	115	212	265	100	70	296	298	198	250	300	350	M16	41.5
50-125/3	2	65	115	145	185	16	4	-	50	95	125	165	16	292	132	160	114	190	240	100	70	254	242	142	180	215	250	M12	20
50-125/4	2	65	115	145	185	16	4	-	50	95	125	165	16	292	132	160	114	190	240	100	70	254	242	142	180	215	250	M12	20
50-160/5.5	2	65	115	145	185	16	4	-	50	95	125	165	16	340	160	180	115	212	265	100	70	296	265	165	230	265	300	M12	28.5
50-160/7.5	2	65	115	145	185	16	4	-	50	95	125	165	16	340	160	180	115	212	265	100	70	296	265	165	230	265	300	M12	28.5
50-200/9.2	2	65	115	145	185	16	4	-	50	95	125	165	16	360	160	200	115	212	265	100	70	296	265	165	230	265	300	M12	29
50-200/11	2	65	115	145	185	16	4	-	50	95	125	165	16	360	160	200	115	212	265	100	70	296	298	198	250	300	350	M16	41.5
50-200/15	2	65	115	145	185	16	4	-	50	95	125	165	16	360	160	200	115	212	265	100	70	296	298	198	250	300	350	M16	42.5
65-125/4	2	80	134	160	200	18	8	4	65	115	145	185	16	340	160	180	140	212	280	100	95	254	242	142	180	215	250	M12	26
65-125/5.5	2	80	134	160	200	18	8	4	65	115	145	185	16	340	160	180	140	212	280	100	95	254	265	165	230	265	300	M12	27.5
65-125/7.5	2	80	134	160	200	18	8	4	65	115	145	185	16	340	160	180	140	212	280	100	95	254	265	165	230	265	300	M12	28.5
65-160/7.5	2	80	134	160	200	18	8	4	65	115	145	185	16	360	160	200	140	212	280	100	95	296	265	165	230	265	300	M12	27
65-160/9.2	2	80	134	160	200	18	8	4	65	115	145	185	16	360	160	200	140	212	280	100	95	296	265	165	230	265	300	M12	30
65-160/11	2	80	134	160	200	18	8	4	65	115	145	185	16	360	160	200	140	212	280	100	95	296	298	198	250	300	350	M16	40
65-160/15	2	80	134	160	200	18	8	4	65	115	145	185	16	360	160	200	140	212	280	100	95	296	308	208	250	300	350	M16	42
65-200/15	2	80	134	160	200	18	8	4	65	115	145	185	16	405	180	225	140	250	320	100	95	296	308	208	250	300	350	M16	29.5
65-200/18.5	2	80	134	160	200	18	8	4	65	115	145	185	16	405	180	225	140	250	320	100	95	296	308	208	250	300	350	M16	29.5
65-200/22	2	80	134	160	200	18	8	4	65	115	145	185	16	405	180	225	140	250	320	100	95	296	308	208	250	300	350	M16	30

DIMENSIONS

50Hz

Rev. H

PUMP 3LSF 65-250, 80

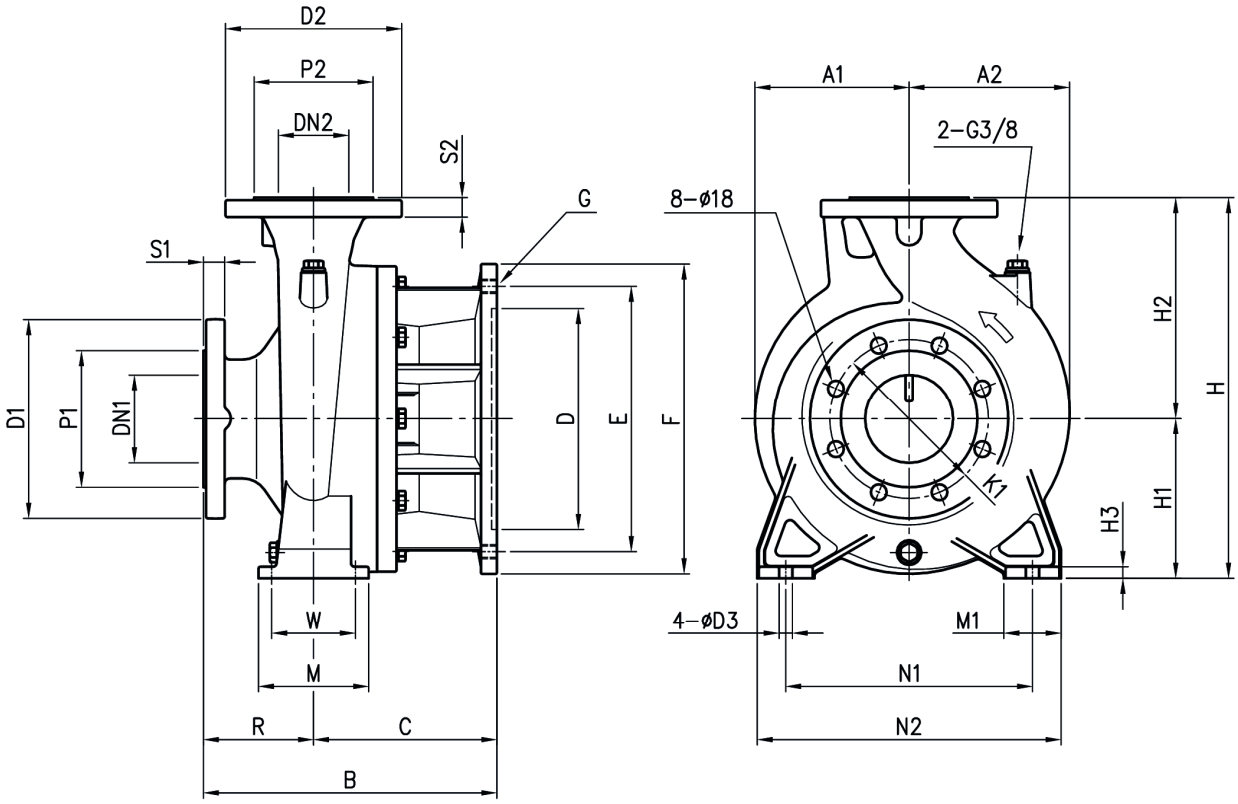

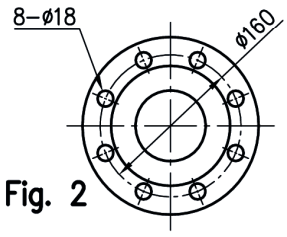

Fig. 2

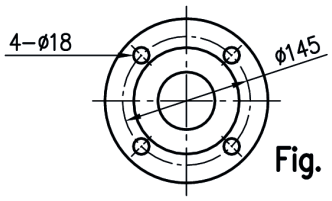

Fig. 1

Pump type	Dimensions [mm]																												Weight [kgf]
	DN1	P1	K1	D1	S1	DN2	P2	D2	S2	H	H1	H2	H3	R	W	N1	N2	M	M1	D3	B	C	D	E	F	G	A1	A2	
65-250/30	80	135	160	200	22	65 Fig. 1	120	185	20	450	200	250	15	100	120	280	360	160	80	19	308	208	300	350	400	4 - M16	200	200	70
65-250/37	80	135	160	200	22	65 Fig. 1	120	185	20	450	200	250	15	100	120	280	360	160	80	19	308	208	300	350	400	4 - M16	200	200	71
80-160/11	100	155	180	225	24	80 Fig. 2	135	200	22	405	180	225	13	125	95	250	320	125	65	15	333	208	250	300	350	4 - M16	175	175	52
80-160/15R	100	155	180	225	24	80 Fig. 2	135	200	22	405	180	225	13	125	95	250	320	125	65	15	333	208	250	300	350	4 - M16	175	175	52
80-160/15	100	155	180	225	24	80 Fig. 2	135	200	22	405	180	225	13	125	95	250	320	125	65	15	333	208	250	300	350	4 - M16	175	175	52
80-160/18.5	100	155	180	225	24	80 Fig. 2	135	200	22	405	180	225	13	125	95	250	320	125	65	15	333	208	250	300	350	4 - M16	175	175	53
80-200/22	100	155	180	225	24	80 Fig. 2	135	200	22	430	180	250	13	125	95	280	345	125	65	15	333	208	250	300	350	4 - M16	175	182	68
80-200/30	100	155	180	225	24	80 Fig. 2	135	200	22	430	180	250	13	125	95	280	345	125	65	15	333	208	300	350	400	4 - M16	200	200	72
80-200/37	100	155	180	225	24	80 Fig. 2	135	200	22	430	180	250	13	125	95	280	345	125	65	15	333	208	300	350	400	4 - M16	200	200	73
80-250/37	100	155	180	225	24	80 Fig. 2	135	200	22	480	200	280	15	125	120	315	400	160	80	19	361	236	300	350	400	4 - M16	200	200	83
80-250/45	100	155	180	225	24	80 Fig. 2	135	200	22	480	200	280	15	125	120	315	400	160	80	19	361	236	350	400	450	8 - M16	225	225	88
80-250/55	100	155	180	225	24	80 Fig. 2	135	200	22	480	200	280	15	125	120	315	400	160	80	19	373	248	450	500	550	8 - M16	275	275	100

DIMENSIONS

50Hz

Rev. H

PUMP 3(.)PF 32, 40, 50, 65

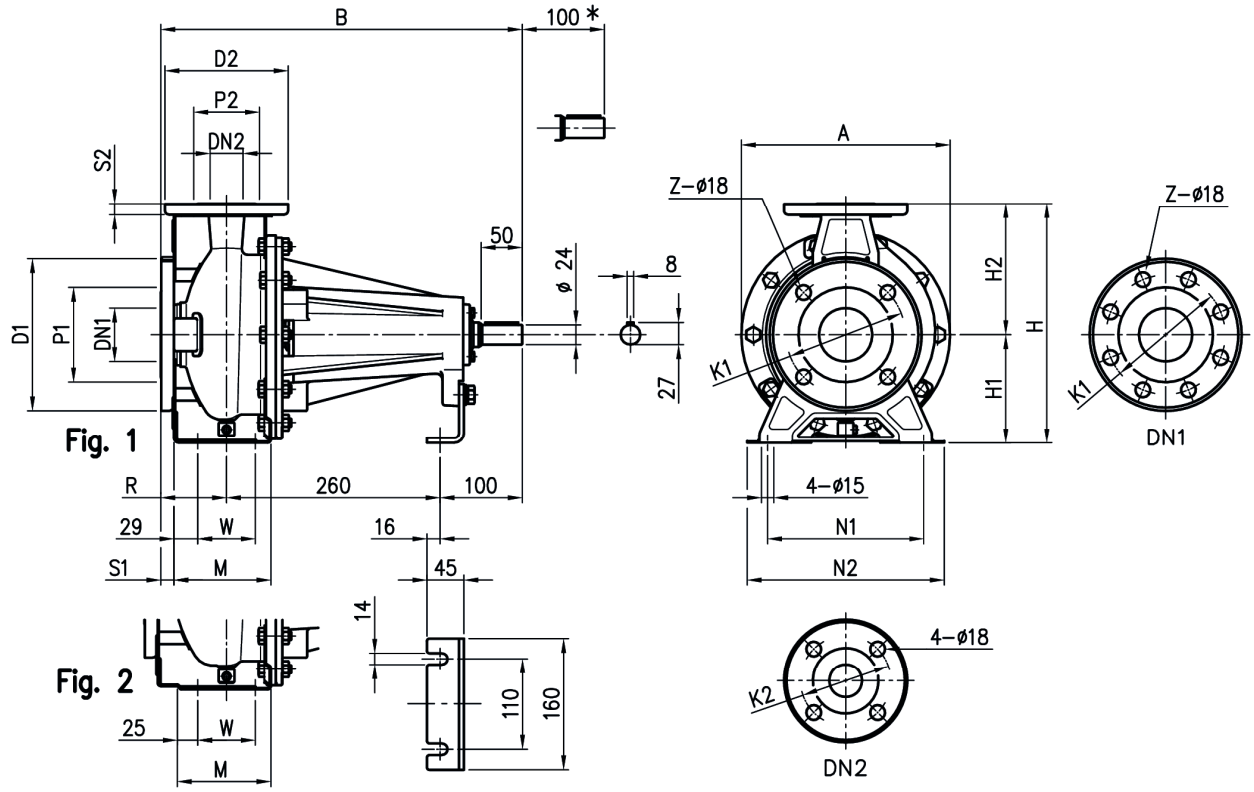

* Space for disassembly.

Pump type	Fig.	Dimensions [mm]																					Weight [kgf]
		DN1	P1	K1	D1	S1	Z [1]	Z [2]	DN2	P2	K2	D2	S2	H	H1	H2	M	N1	N2	R	W	A	B	
32-125	1	50	95	125	165	16	4	-	32	75	100	140	14	252	112	140	114	140	190	80	70	213	440	17
32-160	1	50	95	125	165	16	4	-	32	75	100	140	14	292	132	160	118	190	240	80	70	254	440	19
32-200	1	50	95	125	165	16	4	-	32	75	100	140	14	340	160	180	119	190	240	80	70	296	440	27
40-125	1	65	115	145	185	16	4	-	40	80	110	150	14	252	112	140	114	160	210	80	70	213	440	17
40-160	1	65	115	145	185	16	4	-	40	80	110	150	14	292	132	160	118	190	240	80	70	254	440	19
40-200	2	65	115	145	185	16	4	-	40	80	110	150	14	340	160	180	115	212	265	100	70	296	460	27
50-125	2	65	115	145	185	16	4	-	50	95	125	165	16	292	132	160	114	190	240	100	70	254	460	19
50-160	2	65	115	145	185	16	4	-	50	95	125	165	16	340	160	180	115	212	265	100	70	296	460	28
50-200	2	65	115	145	185	16	4	-	50	95	125	165	16	360	160	200	115	212	265	100	70	296	460	27
65-125	2	80	134	160	200	18	8	4	65	115	145	185	16	340	160	180	140	212	280	100	95	254	460	28
65-160	2	80	134	160	200	18	8	4	65	115	145	185	16	360	160	200	140	212	280	100	95	296	460	29
65-200	2	80	134	160	200	18	8	4	65	115	145	185	16	405	180	225	140	250	320	100	95	296	460	30

[1] Standard [2] On request

DIMENSIONS

50Hz

Rev. H

PUMP 3LP 65-250, 80

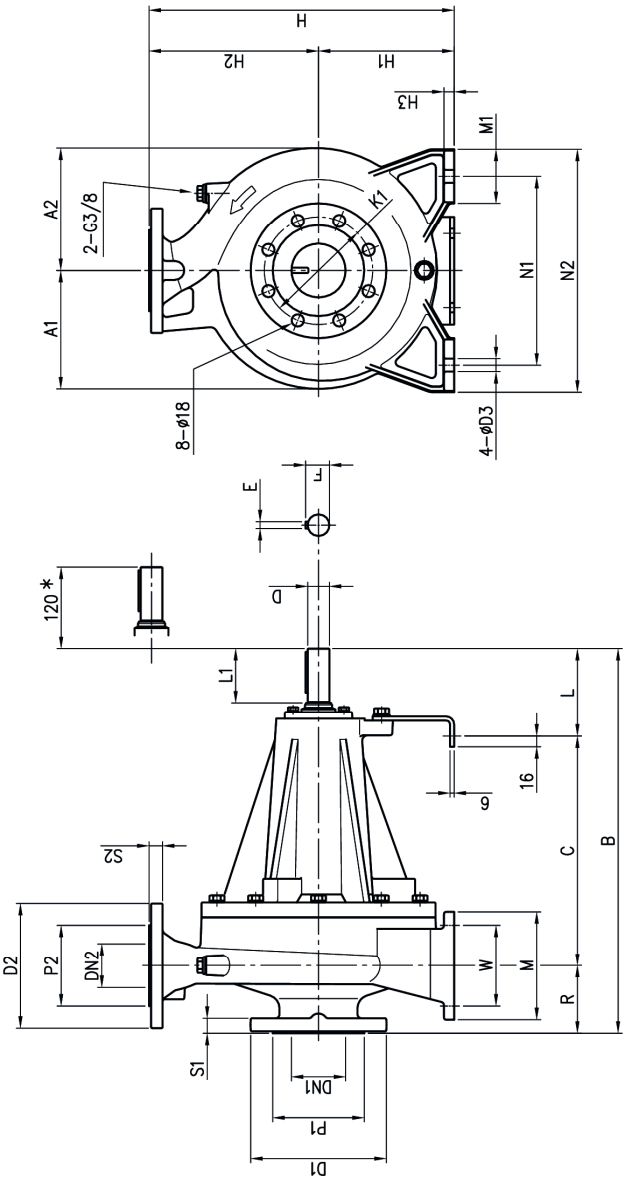

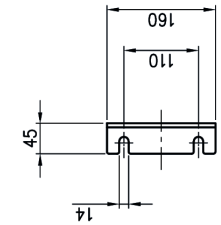

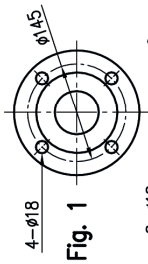

Fig. 1

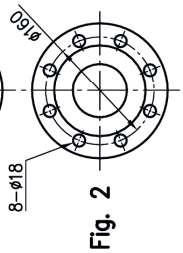

Fig. 2

* Space for disassembly

Pump type	Dimensions [mm]																									Weight [kgf]
	DN1	P1	K1	D1	S1	DN2	P2	D2	S2	H	H1	H2	H3	R	W	N1	N2	M	M1	L	L1	D	D3	E	F	A1	A2	B	C	
3LPF 65-250	80	135	160	200	22	65 Fig. 1	120	185	20	450	200	250	15	100	120	280	360	160	80	130	80	32	19	10	35	175	182	570	340	82
3LPF4 80-160	100	155	180	225	24	80 Fig. 2	135	200	22	405	180	225	13	125	95	250	320	125	65	100	50	24	15	8	27	147	173	485	280	56
3LPF 80-200	100	155	180	225	24	80 Fig. 2	135	200	22	430	180	250	13	125	95	280	345	125	65	130	80	32	15	10	35	175	182	595	340	83
3LPF4 80-250	100	155	180	225	24	80 Fig. 2	135	200	22	480	200	280	15	125	120	315	400	160	80	130	80	32	19	10	35	175	192	595	340	84

PACKING AND WEIGHT

50Hz

Rev. H

PACKING 3(.)SF

Type pumps	PACKING [mm] X	Y	Z	WEIGHT [Kg]	PACK TYPE
32-125/1.1	424	405	374	16	1
32-160/1.5				19	
32-160/2.2					
32-200/3				27	
32-200/4					
32-200/5.5				30	
32-200/7.5					
40-125/1.5				17	
40-125/2.2					
40-160/3				23	
40-160/4					
40-200/5.5				30.5	
40-200/7.5					
40-200/11	375	440	860	44.5	
50-125/2.2	424	405	374	22.5	
50-125/3					
50-125/4					
50-160/5.5				31.5	
50-160/7.5					
50-200/9.2				32	
50-200/11	375	440	860	45	
50-200/15				46	
65-125/4	424	405	374	29	
65-125/5.5				30.5	
65-125/7.5				31.5	
65-160/7.5				30	
65-160/9.2				33	
65-160/11	375	440	860	44	
65-160/15				46	
65-200/15				37	
65-200/18.5				33.5	
65-200/22				34	
65-250/30	475	608	780	75	2
65-250/37				76	
80-160/11	390	533	580	58	
80-160/15R				58	
80-160/15				58	
80-160/18.5				58	
80-200/22	475	610	780	75	
80-200/30				80	
80-200/37				81	
80-250/37				90	
80-250/45	762	690	894	95	
80-250/55				108	

TYPE 1

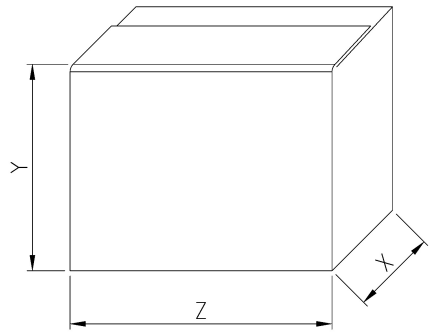

TYPE 2

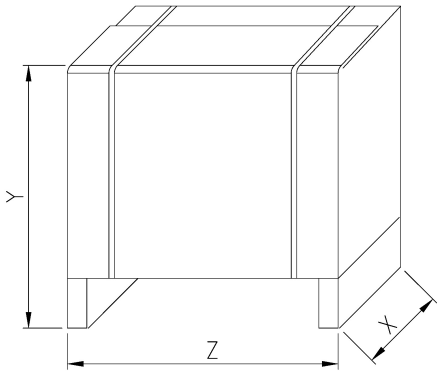

PACKING AND WEIGHT

50Hz

Rev. H

PACKING 3(.)PF

Type pumps	PACKING [mm] X	Y	Z	WEIGHT [Kg]	PACK TYPE
32-125	280	340	490	18	1
32-160/R				20	
32-160					
32-200/R	330	390	500	28.5	
32-200					
32-200/L					
40-125/R	280	340	490	18	
40-125					
40-160/R				20	
40-160					
40-200/R	330	390	500	28.5	
40-200					
40-200/L					
50-125/S	280	340	490	20	
50-125/R					
50-125					
50-160/R	330	390	500	29	
50-160					
50-200/R				29.5	
50-200					
50-200/L					
65-125/R				29	
65-125					
65-125/L					
65-160/S				30.5	
65-160/R					
65-160					
65-160/L					
65-200/R	390	533	580	32	2
65-200					
65-200/L					
65-250	475	608	780	86	
65-250/L					
80-160/S	390	533	580	64	
80-160/R					
80-160					
80-160/L					
80-200/R	475	610	780	87	
80-200					
80-200/L					
80-250/R				93	
80-250					
80-250/L					

TYPE 1

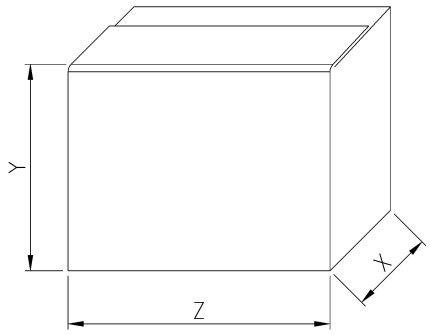
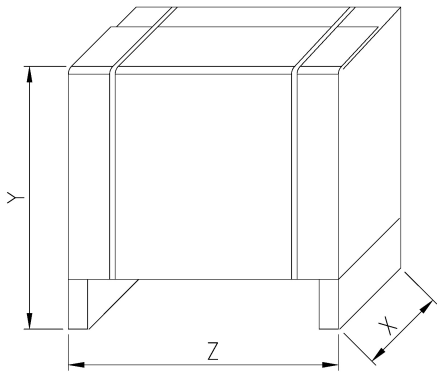
TYPE 2