TYPE 32D

DRY RUNNING SINGLE SEAL

Technical Specification

A – Seat/Mating Ring
B – Face/Primary Ring
C – Retainer
D – Wear Indication
E – Optional (DIN) Flange

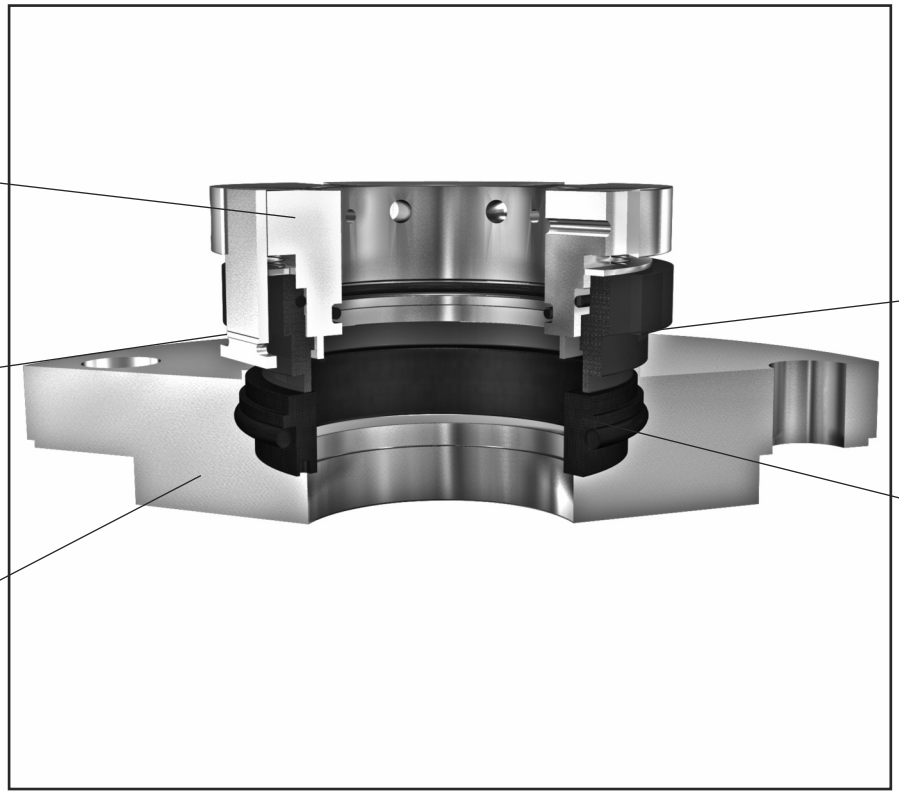

Product Description

Type 32D vessel seals are outside-mounted balanced single seals with self-lubricating seal faces. Neither external cooling, lubrication equipment or a supply system is required. The design and material selection meets the needs of the pharmaceutical and chemical processing industries and they are excellent for low duty mixing applications and operation in vacuum conditions.

The seal can be supplied in component form consisting of spring-loaded face, driver retainer, and mating ring, or pre-assembled on a flange. The flange version can be equipped with a debris well, enabling it to capture face wear particles, preventing the contamination of process fluid. Standard flange designs are available with dimensions to DIN 28138 Parts 1 and 3. Customized flanges available on request.

Design Features

- Single O-ring mixer seal for top entry vessels
- Outside mounted dual balanced face
- Face material of special dry running carbon
- Reverse pressure design (high pressure and vacuum)
- T-Bars for rugged drive and exact axial guidance
- Standard sizes from 25 to 125 mm shaft diameter
- Mechanical wear indication
- Suitable for application in explosive areas. Certificates of conformity according to European Directive 94/9/EC (ATEX) Cat. 1, 2 and 3 available on request
- Standard design options:
  – component seal
  – component seal with standard flange (according to DIN)
  – component seal with flange and debris well

Performance Capabilities*

- Temperature: -40°C to 150°C
- Operating pressure: vacuum up to 6 bar(g)
- Static test pressure: up to 9 bar(g)
- Speed: up to 1000 rpm
  (depending on shaft diameter and pressure)
- Shaft Runout: radial: 1.5 mm
  axial: +/- 1.5 mm

*Maximum values (dependant on combination of operating conditions). For details see chart operating limits below. For operating conditions outside these limits consult John Crane.

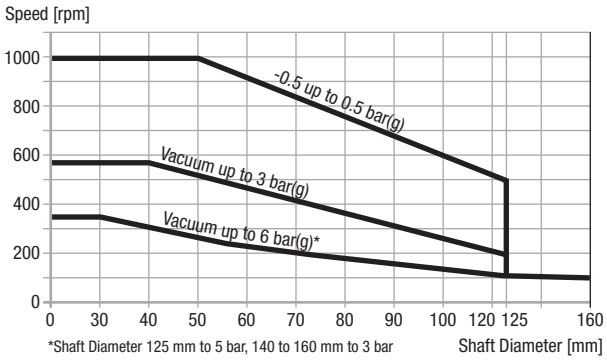

*Shaft Diameter 125 mm to 5 bar, 140 to 160 mm to 3 bar
(For other pressures, please consult John Crane)

TYPE 32D

DRY RUNNING SINGLE SEAL

Technical Specification

Type 32 D Typical Arrangement/Dimensional Data (mm)

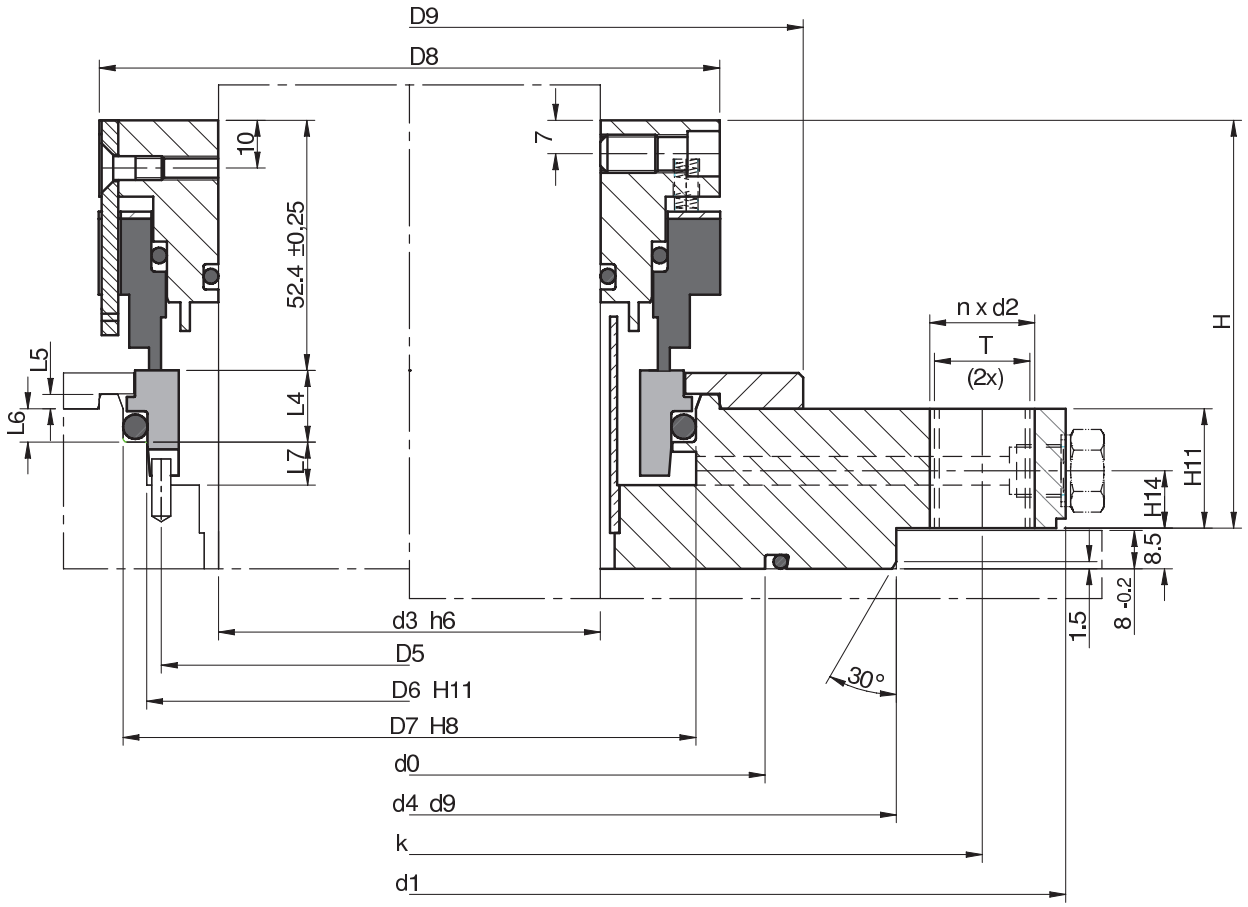

Seal Size	Component Version Dimensions								Standard Flange Dimensions (DIN)							Flange Fastening & Mounting			
d3	**D5**	**D6**	**D7**	**D8**	**L4**	**L5**	**L6**	**L7**	**d0**	**d1**	**d4**	**D9**	**H**	**H11**	**H14**	**k**	**n x d2**	**bolt**	**T**
25	50.5	56	63	79	13	3	5	9	91	175	110	114.5	85.4	25	14	145	4 x 18	M16	M16
30	50.5	56	63	79	13	3	5	9	91	175	110	114	85.4	25	14	145	4 x 18	M16	M16
40	59	65	73	89	13.5	3	5.5	9	91	175	110	175	85.4	32.5	14	145	4 x 18	M16	M16
50	69	75	83	98.5	13.5	3	5.5	9	107	240	176	135	85.4	25	14	210	8 x 18	M16	M16
60	77	83	92	108	14.5	3	6.5	10	120	240	176	145	85.4	25	12	210	8 x 18	M16	M16
70	95	100	110	120	15	3	7	9	156	275	204	160	85.4	25	12	240	8 x 22	M20	M20
80	104	110	120	130	15	3	7	9	149	275	204	165	85.4	25	12	240	8 x 22	M20	M20
90	109	115	125	140	15	3	7	9	149	275	204	175	85.4	25	12	240	8 x 22	M20	M20
100	123	131	140	149	14.5	3	6.5	10	174	305	234	185	85.4	25	12	270	8 x 22	M20	M20
110	133.5	141.5	150.5	159	14.5	3	6.5	9.5	174	305	234	195	85.4	25	12	270	8 x 22	M20	M20
125	152	160	169	175	14.5	3	6.5	10.5	199	330	260	210	85.4	25	12	295	8 x 22	M20	M20

Flange dimensions in accordance to DIN 28138. Special dimensions and designs on request.