Heavy Duty Cartridge Seals

Safematic™ Type SB1, SBW and SB2

Type SB1 Single Seal Arrangement

Robust single seal for clean fluids and low % slurries

Type SB1 is a stationary mounted, multispring, balanced seal supplied as a standard cartridge assembly. A key feature of Type SB1 is that the springs are stationary and located outside the process fluid. They are therefore protected from clogging by dirty and fibrous products. The construction means that as faces wear the patented PTFE slot ring (which replaces the traditional O-ring preventing hang-up and O-ring 'rolling') moves onto a clean part of the primary ring housing, reducing the risk of hang up caused by dirty or crystallising products.

The standard rotating seat is a shrunk-in silicon carbide, the standard primary ring is carbon or silicon carbide shrunk into stainless steel (a hard face option of tungsten carbide is available).

Typical applications

Safeseal Type SB1 is a single cartridge seal for use with clean fluids and low consistency slurries and abrasives: e.g., water, solvents, and paper stock (consistency<2%). It is used in pumps in the paper industry and general industry applications such as water and desalination processes. Type SB1 cartridge seal fits in various pumps as well as other industry specific process equipment. Type SB1 seal is versatile, easy to install and maintain.

Although the design of the seal is simple, it contains advanced technical features such as patented seal face carriers and an elastic mating ring.

Features

The balanced cartridge design makes Type SB1 seal applicable for a wide range of demanding conditions.

1. Seal faces are installed using a patented heat shrink process ensuring correct, distortion-free face alignment at all recommended temperatures.
2. The springs are located in the stationary body of the seal which reduces the risk of the springs becoming clogged. Shaft misalignment does not vibrate or wear out the O-rings.
3. PTFE slot rings replace the traditional O-rings in places where they are exposed to the product, preventing sticking.
4. Protected faces, the seal face carriers are driven by machined fits, preventing metal stress from distorting the face.
5. Good availability in stock of larger sizes.

Technical specifications

Temperature	250°F/121°C max
Stuffing box pressure	Up to 220 psig/15 barg
Speed	Up to 4,000 fpm/20 $m \cdot s^{-1}$

Materials

Seal faces	SiC/Carbon SiC/SiC
O-rings	PTFE EPDM Viton® FFKM
Metals	AISI 329 and 316 standard, SAF 2507 for sea water applications, Titanium, Hastelloy, UHB 904
Springs	Nimonic steel Hastelloy C 276

Standard seal

SB1-ØD2-GREO

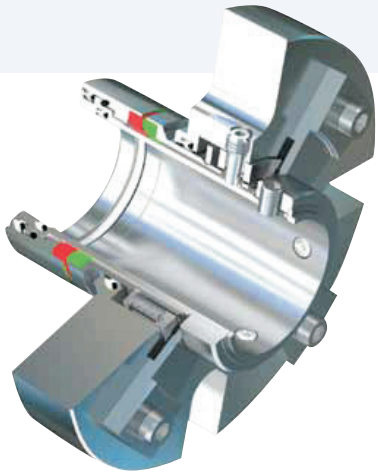

Typical Arrangement/Dimensional Data

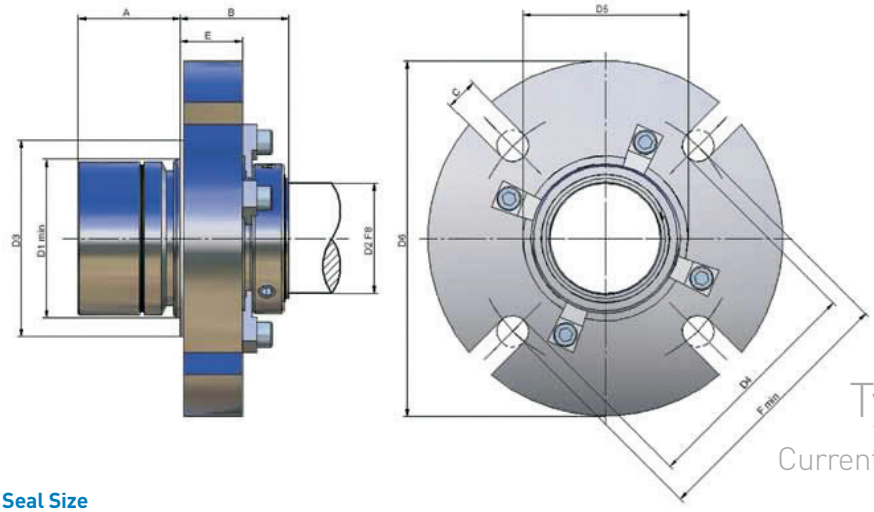

Type SB1 dimensions (mm)

Currently available size range is 20 to 220 mm.

Seal Size

D2	A	B	C	E	D1	D3	D4	F min	D5	D6
35	42	44	13	25	51	67	67	79	55	130
38	42	44	13	25	58	75	75	86	65	130
40	42	44	13.5	25	60	76	76	90	66	130
43	42	44	13.5	25	65	78	78	90	70	150
45	42	44	13	25	65	81	81	93	68	145
48	42	44	13	25	68	84	84	100	73	150
50	42	44	13	25	70	86	86	98	73	160
53	42	44	13	25	75	91	91	103	80	160
55	42	44	13	25	75	91	91	103	80	160
58	42	44	13	25	83	97	97	109	85	160
60	42	44	13	25	85	97	97	109	87	160
63	47	51	17	30	90	100	100	112	92	180
65	47	51	17	30	90	105	105	121	92	180
68	47	51	17	30	95	112	112	127	95	180
70	47	51	17	30	95	112	112	155	99	200
75	54	51	17	30	104	115	115	132	106	200
80	54	51	17	30	109	122	122	138	111	210
85	54	51	17	30	114	127	127	158	116	220
90	54	51	17	30	124	132	132	165	117	220
95	54	51	17	30	124	138	138	165	126	220
100	54	51	17	30	129	148	148	165	131	220
105	54	51	17	30	135	160	160	175	134	220
110	59	56	17	32	146	177	183	199	150	240
115	60	55	22	32	155	180	180	200	150	250
135	70	65	22	42	180	215	220	240	177	265
150	65	65	20	42	195	230	235	255	192	285
165	61	65	22	36	205	239	239	260	207	295
175	61	65	22	36	225	245	245	265	219	305
185	61	62	22	34	235	255	255	275	228	330
190	61	62	22	34	235	255	255	275	228	350
200	61	62	22	32	260	280	280	300	246	398
220	63	62	22	33	280	300	320	340	268	398

Special sizes available upon request.

Type SBW Quench Seal Arrangement

Reliable seal with non-pressurised buffer fluid now also available with grease quench

Type SBW is a similar seal to Type SB1 but also features a V-ring for retention of seal quench and a piston design which allows it to float with the shaft during axial movement that happens during an impeller adjustment.

Typical applications

Safeseal Type SBW is a single seal cartridge used with unpressurised buffer fluid. Type SBW seal can be used in many general industry applications. The option to use Type SBW seal with grease quench make this seal suitable to be used in mines and other applications where seal water is not available. The design ensures reliable performance and longevity under demanding conditions. Typical applications include paper stock pumps in paper industry and high temperature condensate pumps. Type SBW cartridge seal fits other process equipment such as agitators in addition to pumps.

Features

1. Balanced design
   Sudden changes in pressure do not affect seal function.
2. Springs are located in the stationary part of the seal, in the buffer fluid. Shaft misalignment will not vibrate the springs or wear out the O-rings. The buffer fluid washes the springs.
3. Cartridge design
   No measurements necessary for installation, easy to install, reducing possibilities of human error.
4. No drive pins in contact with faces
   No face cracking during start-up.
5. Available in different materials
   Selection covers all single seal applications.
6. Unpressurised buffer fluid or grease quench
   At high temperatures, the seal is cooled with an unpressurised (quench) wash. A V-ring prevents wash water leakage. When using grease quench please refer to I&O manual instructions and recommendations

Technical specifications

Temperature	300°F/150°C max
Stuffing box pressure	Up to 220 psig/15 barg
Buffer fluid pressure	7.5 psig/0.5 barg max
Speed	Up to 4,000 fpm/20 $m \cdot s^{-1}$

Materials

Seal faces	SiC/Carbon SiC/SiC
O-rings	PTFE EPDM Viton® FFKM
Metals	AISI 329 and 316 standard, Titanium, Hastelloy, UHB 904
Springs	Nimonic steel Hastelloy C 276

Standard seal

SBW-ØD2-QREV

Safeunit

0 psig/0 barg
0.1 to 0.4 gpm/0.5 to 1.5 lpm

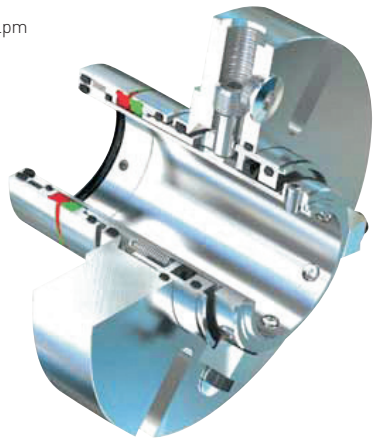

Typical Arrangement/Dimensional Data

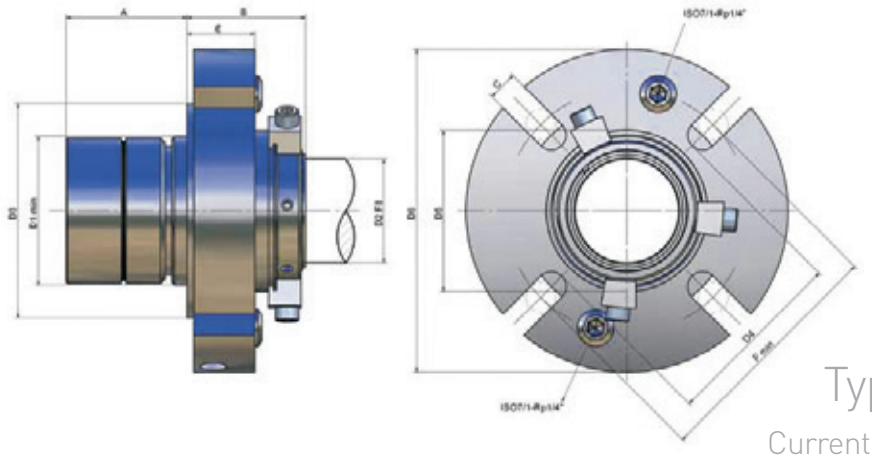

Type SBW dimensions (mm)

Currently available size range is 24 to 265 mm.

Seal Size

D2	A	B	C	E	D1	D3	D4	F	D5	D6
35	52	49	13	30	55	79	70	91	61	130
38	52	52	13	30	58	84	73	98	65	130
40	52	52	13	30	60	86	75	98	66	130
43	52	52	13	30	65	93	80	101	70	140
45	52	52	13	30	65	93	80	105	70	140
48	52	53	13	30	68	93	83	105	73	140
50	52	53	13	31	70	99	86	111	75	160
53	52	53	13	31	70	99	86	111	75	160
55	52	53	13	31	75	99	90	111	80	160
58	52	53	13	31	83	99	94	111	85	160
60	52	53	13	31	85	111	98	123	87	160
63	54	60	17	35	90	116	102	127	92	160
65	54	60	17	35	90	116	102	127	92	160
68	54	60	17	35	95	139	112	127	95	210
70	54	60	17	35	95	139	112	155	99	210
75	62	65	17	35	104	139	117	155	106	210
80	62	65	17	35	109	139	123	155	111	210
85	62	65	17	35	114	149	134	165	116	210
90	62	65	17	35	119	149	136	165	121	210
95	62	65	17	35	124	149	140	165	126	210
100	62	65	17	35	129	159	145	175	131	210
105	62	65	17	35	135	169	150	175	136	220
120	70	60	17	34	159	188	188	204	147	250
125	70	60	22	34	160	189	189	209	155	300
135	82	67	22	34	182	202	202	222	165	250
150	70	70	23	36	200	216	216	236	183	266

Type SB2 Dual Seal Arrangement

Double-balanced dual cartridge seal designed for tough duties

Typical applications

Safeseal Type SB2 is a dual cartridge seal. Its double-balanced design ensures the reliability and longevity of the seal in the most demanding conditions. Type SB2 seal is ideal for use with fibrous and abrasive fluids, most often used in pumps in pulp mills, minerals processing and other slurry duties up to 40% solids by weight and a solids hardness of 8 Mohs. Type SB2 seal is widely used with other process equipment including agitators.

Features

1. Seal faces are installed using a patented heat shrink process ensuring correct, distortion-free face alignment at all recommended temperatures.
2. The springs are located in the stationary body of the seal in barrier fluid.

   The barrier fluid washes the springs, preventing process chemical corrosion and reduces the risk of the springs becoming clogged. Shaft misalignment does not vibrate or wear out the O-rings.
3. PTFE slot rings replace the traditional O-rings in places where they are exposed to the product, preventing sticking.
4. Protected faces, the seal face carriers are driven by machined fits, preventing metal stress from distorting the face.
5. Patented double-balanced design allows the use of both pressurised and un-pressurised barrier fluid and prevents face overload.
6. Type SB2 Series seals will accept ± 0.08"/2.03 mm axial movement (shaft end play) during normal operation due to their piston design. Impeller adjustments do not affect face load or spring force.

Technical specifications

Temperature	350°F/180°C max
Stuffing box pressure	290 psig/20 barg max
Buffer fluid pressure	Up to 220 psig/15 barg
Speed	Up to 4,000 fpm/20 $m \cdot s^{-1}$

Materials

Seal faces	SiC/Carbon SiC/SiC
O-rings	PTFE EPDM Viton® FFKM
Metals	AISI 329 and 316 standard, Titanium, Hastelloy, UHB 904 SAF 2507 for sea water applications
Springs	Nimonic steel Hastelloy C 276

Standard seal

SB2-ØD2-QRMG

Safeunit

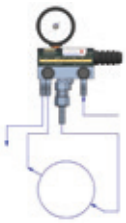

Typical Arrangement/Dimensional Data

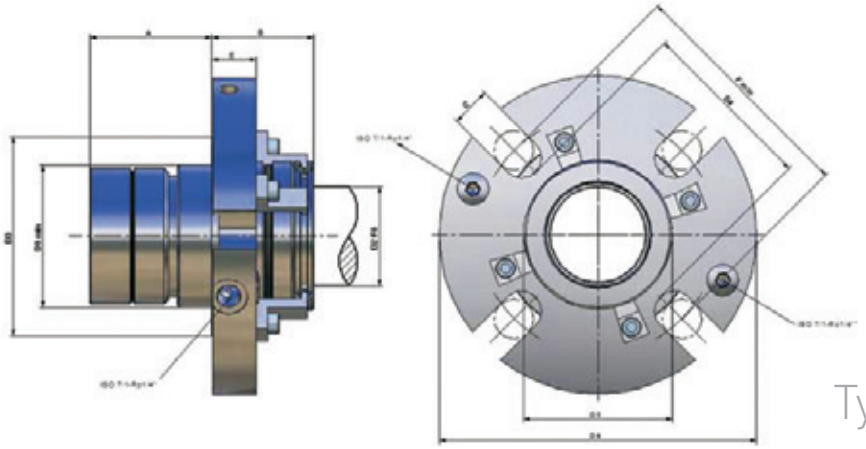

Type SB2 dimensions (mm)

Currently available size range is 24 to 170 mm.

Seal Size

D2	A	B	C	E	D1	D3	D4	F	D5	D6
35	57	49	13	20	58	79	68	91	62	130
38	59	52	13	23	62	86	72	98	66	130
40	59	52	12	23	62	86	72	98	66	130
43	59	52	13	23	67	89	77	101	70	130, 150*
45	59	52	13	23	69	93	79	105	75	130, 150*
48	60	53	13	23	72	93	82	105	75	140, 150*
50	60	53	13, 17	23	74	99	84	111/115	77	140, 170*
53	60	53	13	24	76	99	86	111	80	140, 170*
55	64	53	13, 17	24	79	99	89	111/115	82	150, 170*
58	64	53	13	24	83	99	93	111	84	150
60	64	53	13, 17	24	85	111	95	123/127	87	150, 170*
63	73	60	17	25	90	111	99	127	90	160
65	72	60	17	25	93	111	102	127	92	160, 170*
68	72	60	17	25	95	111	104	127	95	170
70	72	60	17	25	95	139	105	155	98	170, 220*
75	74	65	17	27.5	104	139	108	126/172	102	180
80	74	65	17	29	109	139	118	155	111	200, 220*
85	78	70	17	30	114	149	123	165	111	200, 220*
90	78	70	17	30	119	149	128	165	120	200, 220*
95	78	70	17	30	125	149	134	165	125	200
100	76	76	17	34	129	159	138	175	131	220
105	76	76	17	34	135	169	144	175	134	220
110	76	76	17	34	140	169	149	175	139	230
115	76	76	17	34	150	179	160	185	150	230
120	76	76	17	34	157	188	170	194	158	245
125	76	76	17	34	160	189	175	194	170	270
130	84	86	17	36	166	194	180	210	174	280
135	84	86	17	36	172	199	185	215	179	280
140	84	86	17	36	178	206	192	222	187	280
150	74	90	17	40	184	206	206	222	195	280

This seal is the most technically advanced seal on the market.
Combined with the Safeunit control and monitoring systems, it guarantees long and trouble-free use.
*Standard and extra large flange sizes. Special sizes available upon request.

Mechanical Sealing Systems

With Type SB seals you can standardise your seal inventory and reduce the amount of capital.

Type SB Seal Identification Codes

E.g. SB2-50-QRMG-302197

XXX-XX-$X_1X_2X_3X_4$-XXXXXX

(1) (2) (3) (4)

(1) Type of seal
- SB1: single seal
- SBW: single seal with quench
- SB2: double seal

(2) Shaft diameter: (in, mm)

(3) Material codes:

X_1= inboard faces	X_2= wetted metals	X_3= elastomers	X_4= outboard faces
Q-SiC/SiC	R-AISI 316/329	M-PTFE/EPDM	G-SiC/Carbon
G-SiC/Carbon	T-Titanium	N-PTFE/FKM	Q-SiC/Si
	U-UHB 904 L	E-EPDM	V-V-ring
	S-SMO 254	V-FKM (Viton®)	O-Single seal
	H-Hastelloy C	K-FFKM /EPDM	
	X- Special, refer to drawing	L-FFKM/FKM	
		X- Special, refer to drawing	

(4) Drawing number

John Crane Safematic Seal Support Systems

John Crane Safematic™ is continuously developing systems to filter, control and monitor the seal water:

Safeunit Complete solution for seal water control and seal condition

Safeunit Ultima New generation seal water control and monitoring system

Smartflow Designed to provide lubrication and cooling for double mechanical seals in wide range of industries simultaneously providing dramatic water usage reduction compared to traditional flow meters.

John Crane has a comprehensive network of highly trained representatives, distributors and installation and maintenance personnel. Contact your local John Crane sales office for more information.