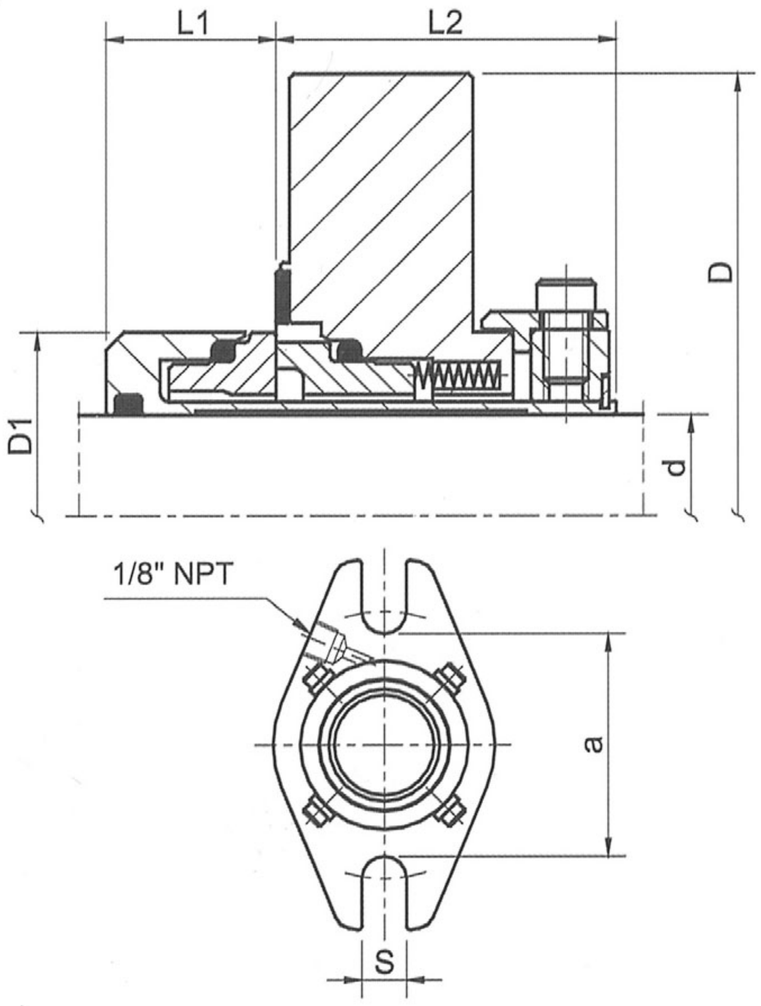

Technical Features

- ▶ Single cartridge seal
- ▶ Balanced
- ▶ Fixed multiple springs
- ▶ Isolated springs from the environment
- ▶ Rotary seal faces
- ▶ Depending on demand, the gas chamber / input cooling capability is available

Operating Range

- ▶ d1 = 24 - 100mm, 1.000 - 4.000”
- ▶ p = 20 bar
- ▶ t = -35 160 ˚C
- ▶ Vg = 30 m/sn

Stationary Seat Alternatives:

- ▶ Standard seats

Material

- ▶ Rotary seal faces: Carbon, Silicon carbide, Tungsten Carbide,
- ▶ Stationary seal faces: , Silicon carbide, Tungsten Carbide,
- ▶ Elastomers :EPDM,FPM,FEPM, HNBR
- ▶ Springs : AISI 316
- ▶ Othermetal parts: AISI 304 , 316

★ STANDARD SEATS

d	d (in)	D	D1	L1	L2	a	S
24	-	104	43.5	19	38	62	12.5
25	1.000	104	43.5	19	38	62	12.5
28	1.125	104	46.5	19	38	62	12.5
30	-	104	48.5	19	38	65	12.5
32	1.250	104	50.0	19	38	67	12.5
33	-	104	50.0	19	38	67	12.5
35	1.375	115	53.5	19	38	70	12.5
38	1.500	125	56.5	19	38	75	14.7
40	-	125	58.5	19	38	75	14.7
42	1.625	133	60.5	19	38	80	14.7
43	-	133	61.5	19	38	80	14.7
45	1.750	140	63.5	19	38	81	14.7
48	1.875	140	66.5	19	38	84	14.7
50	2.000	140	68.5	19	38	87	14.7
53	2.125	150	71.5	19	38	90	17.5
55	-	150	73.5	19	38	92	17.5
58	2.250	155	76.6	19	38	95	17.5
60	2.375	160	78.5	19	38	100	17.5
63	2.500	165	81.5	19	38	103	17.5
65	-	165	83.5	19	38	105	17.5
-	2.625	170	85.5	19	38	110	17.5
68	-	170	86.5	19	38	110	17.5
70	2.750	180	88.5	19	38	120	17.5
-	2.875	190	98.0	26	36	123	17.5
75	3.000	190	100.0	26	36	125	17.5
80	3.125	190	105.0	26	36	130	17.5
-	3.250	220	108.0	26	36	133	20.5
85	3.375	220	110.0	26	36	135	20.5
90	3.500	220	115.0	26	36	140	20.5
-	3.625	220	117.0	26	36	142	20.5
95	3.750	220	120.0	26	36	145	20.5
100	4.000	220	125.0	26	36	150	20.5