EagleBurgmann
a member of EKK and FREUDENBERG

RELY ON EXCELLENCE

MDGS

Mechanical seals | Compressor seals | Gas-lubricated seals

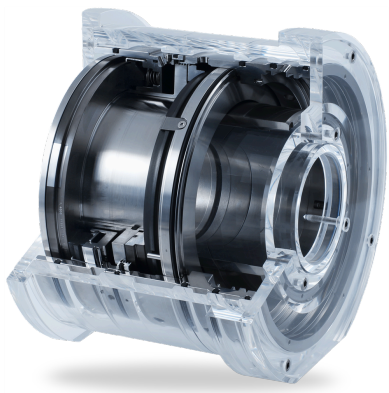

Features
- Gas-lubricated
- Bi-directional
- Compact, radial design
- Ready-to-fit cartridge unit, also available as a component seal
- Single, double, tandem seal and tandem with intermediate labyrinth available

Advantages
- Wear-free and contact-free operation
- Self-cleaning 3D gas grooves
- High gas film stiffness
- Fits into small spaces (e.g. process gas screw compressors)
- Available in various materials for optimized chemical resistance
- Proven, reliable and economical solution

Operating range
Shaft diameter:
d1 = 48 ... 200 mm (1.89" ... 7.87")
Pressure:
p = 0 ... 50 bar (0 ... 725 PSI)
Temperature:
t = -20 °C ... +200 °C
(-4 °F ... +392 °F)
Sliding velocity:
vg = 0.6 ... 200 m/s (2 ... 656 ft/s)

Materials
Seal face: Carbon graphite
Seat: Ductile stainless steel with DM-TiN coating
Secondary seals: FKM
Metal parts: 1.4006 or other stainless steels.

Standards and approvals
- NACE

Notes
EagleBurgmann MDGS are rugged seals for screw compressors. They have a rotating ring made from ductile material with a high-performance coating. Rotating rings are "in-situ shrouded", making them practically indestructible. The coating offers excellent wear resistance in the low speed range (e.g. coast-down operation) in which contact between the seal faces is unavoidable.

The stationary, spring-mounted system is optionally available as a sub-cartridge in combination with a rotating seat made from ductile material. A secondary sealing function using O-rings allows it to be applied as a component seal.

Dimensions on request.

Recommended applications
- Oil and gas industry
- Refining technology
- Petrochemical industry
- Hydrocarbon gas
- Nitrogen

All technical specifications are based on extensive tests and our many years of experience. The diversity of possible applications, however, means that they can serve only as guide values.

We must be notified of the exact conditions of application before we can provide any guarantee for a specific case. This is subject to change.

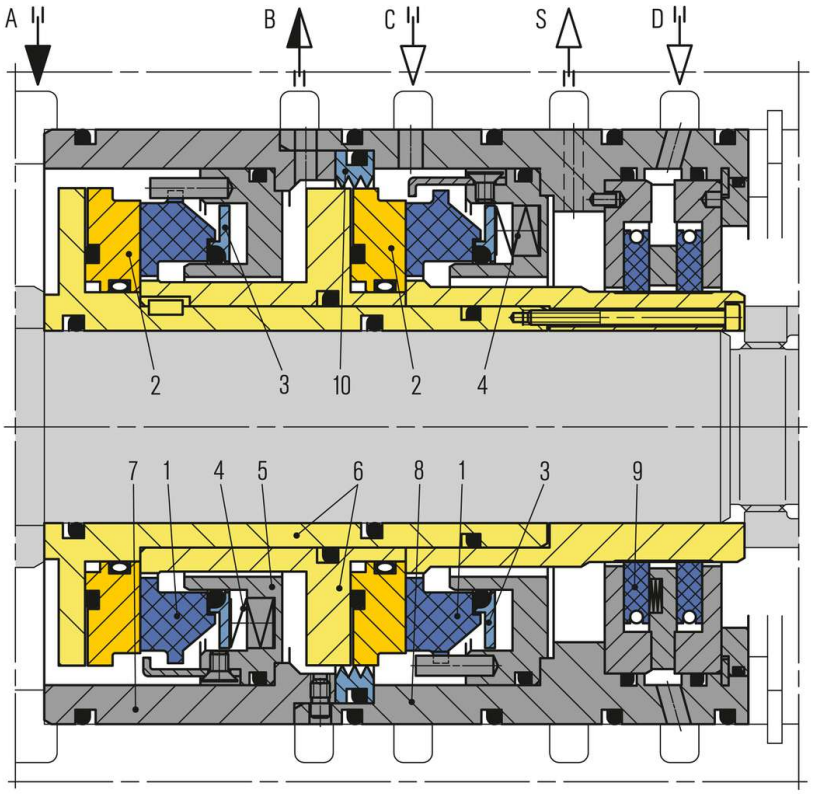

- Air
- Centrifugal compressors
- Dry process gas screw compressors
- Blowers

MDGS Tandem seal with intermediate labyrith

A Primary seal gas supply
B Primary vent
C Secondary gas seal supply
S Secondary vent
D Separation gas supply

Item	Description
1	Seal face, stationary
2	Seat, rotating
3	Thrust ring
4	Spring
5	Adapter
6	Shaft sleeve, intermediate sleeve
7, 8	Housing (size matched to installation space)
9	Carbon ring separation seal (CSE)
10	Intermediate labyrinth

Product links separation seals:
EagleBurgmann CSE
EagleBurgmann CSR
EagleBurgmann CobaSeal

All technical specifications are based on extensive tests and our many years of experience. The diversity of possible applications, however, means that they can serve only as guide values.

We must be notified of the exact conditions of application before we can provide any guarantee for a specific case. This is subject to change.

Installation, details, options

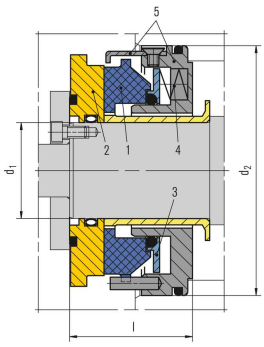

MDGS Single seal
Application: where leakage of the product into the atmosphere is not harmful, e.g. from air or nitrogen compressors or the axial cavity does not allow a tandem seal (e.g. geared compressors). This version allows process gas leakage to the corresponding flare / vent connection. Primary seal leakage is dissipated with the separation gas to the vent. The gas to be sealed must also be filtered and routed to the seal chamber via connection "A". The resulting flow from the sealed space to the impeller side prevents contaminated / wet gas reaching the Dry Gas Seal on the process gas side, e.g. towards the labyrinth.

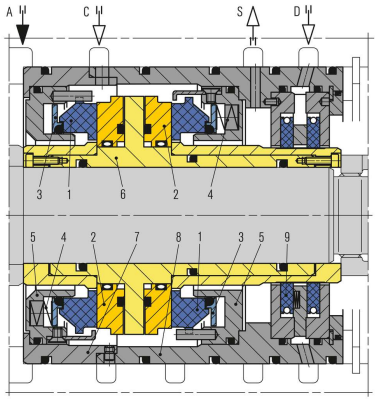

MDGS Double seal
Application: where product leakage to the atmosphere/flare is unacceptable or for low pressure applications. Seal gas leakage into the product needs to be permitted (seal gas pressure p3 > p1). This is used when a neutral seal gas is available at the appropriate pressure. Typical applications can be found in the chemical and petrochemical industries, e.g. in HC gas compressors. A seal gas, e.g. nitrogen at a pressure higher than the product pressure, is supplied between the seals via connection "C". Part of the seal gas leakage dissipates to the bearing side, while the other part goes to the product.

A Buffer gas supply
C Seal gas supply
S Vent
D Separation gas supply

All technical specifications are based on extensive tests and our many years of experience. The diversity of possible applications, however, means that they can serve only as guide values.

We must be notified of the exact conditions of application before we can provide any guarantee for a specific case. This is subject to change.

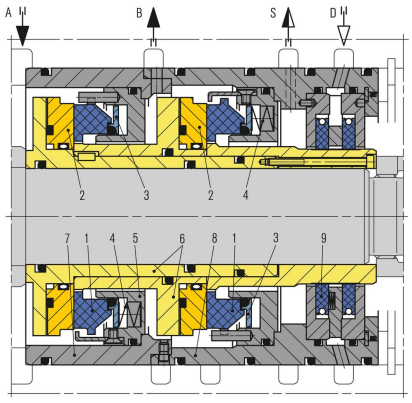

MDGS Tandem seal
Application: where no N2 is available and minimal process gas leakage to the atmosphere is acceptable, e.g. gas pipeline compressors. The seal on the bearing side is intended as a safety seal. The tandem arrangement offers particularly good operational safety. The process side and bearing side seals are able to withstand the full pressure. In normal operation, only the process side seal reduces the full pressure. The space between the process side and bearing side seals is routed to the flare via connection "B". The pressure to be sealed on the bearing side corresponds to the flare pressure. There is thus very little leakage to the bearing side or to the vent. If the primary seal fails, the secondary seal is activated as a back-up and operates at primary seal conditions.

A Primary seal gas supply
B Primary vent
S Secondary vent
D Separation gas supply

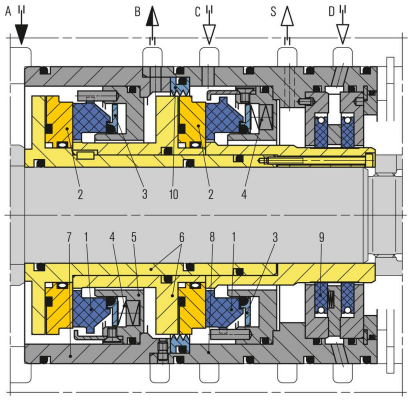

MDGS Tandem seal with intermediate labyrinth
Application: where product leakage to the atmosphere is unacceptable, e.g. H2, ethylene or propylene compressors. With this type of seal, the product pressure to be sealed is reduced via the seal on the process side. The entire process gas leakage is routed to the flare via connection "B". The bearing side seal is pressurized with secondary seal gas (nitrogen) via connection "C". The pressure of the secondary seal gas ensures the flow through the labyrinth to the flare/ tapping point.

A Primary seal gas supply
B Primary vent
C Secondary gas seal supply
S Secondary vent
D Separation gas supply

eagleburgmann.com
info@eagleburgmann.com

All technical specifications are based on extensive tests and our many years of experience. The diversity of possible applications, however, means that they can serve only as guide values.

We must be notified of the exact conditions of application before we can provide any guarantee for a specific case. This is subject to change.